A7
V34m US-CE-C
no. 4-626
cop. 3

Property of the United States Government

THEORY FOR A TOWED WHEEL IN SOIL

MISCELLANEOUS PAPER NO. 4-626

February 1964

U. S. Army Engineer Waterways Experiment Station
CORPS OF ENGINEERS
Vicksburg, Mississippi

RESEARCH CENTER LIBRARY
U.S. ARMY WATERWAYS EXPERIMENT STATION
VICKSBURG, MISSISSIPPI

THEORY FOR A TOWED WHEEL IN SOIL

MISCELLANEOUS PAPER NO. 4-626

February 1964

U. S. Army Engineer Waterways Experiment Station
CORPS OF ENGINEERS
Vicksburg, Mississippi

ARMY-MRC VICKSBURG, MISS.

TA7
W34m
no. 4-626
cop. 3

Preface

This paper was cleared for open publication by the Department of Defense by 1st indorsement, dated 6 December 1963, to a letter of request for clearance from the Director of the Waterways Experiment Station to the Chief of Engineers, dated 8 November 1963, subject "Clearance of Technical Articles for Publication."

Because of unresolved differences, both pro and con, regarding the theory discussed in the paper, the DOD regulations require that the author take full professional responsibility for the contents of this paper and that it be pointed out that this clearance does not imply DOD indorsement of factual accuracy or opinion.

Open publication of this paper was encouraged by the Director of the Waterways Experiment Station in order to encourage and stimulate wider interest in, and permit a critical review in the engineering journals by other interested members of the scientific and engineering community of a subject of deep interest to the Army.

The paper has been submitted to the American Society of Civil Engineers for consideration for publication in its Journal of the Soil Mechanics and Foundations Division.

This work was accomplished as a part of the mobility investigational program of the Waterways Experiment Station. This program is sponsored by the U. S. Army Materiel Command through its representative, Mr. R. R. Philippe. This research program is under the immediate direction of the following Waterways Experiment Station staff engineers: Mr. W. J. Turnbull, Technical Assistant for Soils and Environmental Engineering; Mr. W. G. Shockley, Chief of the Mobility and Environmental Division;

30577

Mr. S. J. Knight, Chief of the Army Mobility Research Branch; and Mr. D. R. Freitag, Chief of the Mobility Section.

Col. Alex G. Sutton, Jr., is Director of the Waterways Experiment Station, and Mr. J. B. Tiffany is Technical Director.

THEORY FOR A TOWED WHEEL IN SOIL[1]

John L. McRae,[2] M. ASCE

SYNOPSIS

This paper deals with one small phase of the problem of mobility for cross-country vehicles, namely a wheel being towed through soft soil. A new concept in soil mechanics is sought which will cope with the problem of the behavior of soil when massive displacements are involved, as occurs when a wheel cuts a deep rut in soft material. It is suggested that such movement of a soil is more in the nature of a flow phenomenon, and an energy-per-unit-volume concept is hypothesized in which the total energy spent (area under the load-sinkage curve) is divided by the net volume of soil displaced by a penetrating element.

While it is assumed in this paper that the load-sinkage curve can be represented by a power function of the general form $y = aX^n$, it is recognized that this assumption may have to yield in time to some other more accurate representation of the load versus sinkage relation for a wheel; quite possibly a hyperbolic function is better. The energy-per-unit-volume concept is considered to be the fundamental feature of this paper (not the shape of the sinkage curve) and the author feels that it will remain a basic and useful concept that can be applied regardless of the nature of the mathematical expression that is ultimately accepted as the best approximation of the sinkage curve.

---

1. The views of the author do not purport to reflect the position of the Department of the Army.
2. Engineer, Mobility Branch, Mobility & Environmental Division, U. S. Army Engineer Waterways Experiment Station, Vicksburg, Mississippi.

This paper first develops basic formulas for predicting the sinkage and towing resistance of a rigid wheel in soft soil on the basis of plate penetration tests. These basic formulas are then modified and extended to make them applicable to the more complicated performance of pneumatic tires inflated to varying degrees. Results of the application of the theory for extensive tests in dry (found near Yuma, Arizona) desert sand are presented.

An appendix is included for readers who may be interested in a purely mathematical treatment of the energy-per-unit-volume concept.

INTRODUCTION

The hyphenated word, load-flow, has been coined to describe this theoretical concept partly for convenience of reference and partly to employ a suitably descriptive term, since this theory is primarily a development of the interrelation between load, volume of soil displaced (or caused to flow), total energy or work, and energy or work per unit volume of soil displaced. In other words, the load-flow theory deals with situations wherein the deformation of the soil greatly exceeds the conventional yield point or bearing capacity, and is actually more of a flow phenomenon. Since this is a flow phenomenon, representing gross shear and large volume displacements, the load-flow approach deliberately avoids attempting to deal with the details of exact stress distribution within the soil mass, and attempts rather to deal with external measurements of load, movement, volume, and energy which can be measured and dealt with more readily. In dealing with the unit pressure, engineering approximations are used, and it is not believed that refinements dealing with pressure distribution are warranted at this stage of the development. Actually, the deformation of

soils under off-the-road vehicles is of little or no concern where the soil is sufficiently stable that the applied stresses do not appreciably exceed the yield point or bearing capacity.

The mathematical basis for this development rests upon the assumption that the log of the contact pressure versus the log of the depth of penetration can be represented by a straight line. This equation, proposed by M. N. Letoshnev[3] and based on the original equation

$$p = kZ^{1/2}$$

proposed by R. Bernstein,[4] is as follows:

$$p = kZ^{n}$$

where

p = unit pressure

Z = depth of penetration

k , n = constants for a given penetrating element in a given soil.

M. G. Bekker[5] has used a modification of this formula as a basis for his theoretical development with regard to sinkage and motion resistance for wheels and tracks. The load-flow approach does not modify Letoshnev's basic equation in any way, but rather retains this basic relation and expands it to include the volumetric relation, which follows naturally, and is expressed as follows:

$$p = KA^{n}Z^{n} = KV^{n}$$

where

p = unit pressure

---

3. M. N. Letoshnev, "Theory and Production of Agricultural Machinery," Moscow, 1936.
4. R. Bernstein, "Problems of Experimental Mechanics of Motor Ploughs," Der Motorwagen, No. 16, 1913.
5. M. G. Bekker, "Theory of Land Locomotion" and "Off-the-Road Locomotion," Ann Arbor, The University of Michigan Press.

A = area of penetrating element

Z = penetration or sinkage

V = A · Z = volume displaced

K , n = constants for a given penetrating element in a given soil.

The load-flow theory further assumes that K from the above equation is a power function of area, or in other words K versus A is a straight line on a log plot. The equation for this then is:

$$K = CA^{-X}$$

This equation makes it possible to calculate values of K for any area, once this relation is established by means of plate tests of at least two different sizes. The ability to calculate K for any area makes it possible to calculate the anticipated volume displacement (V) and hence the expected penetration or sinkage of an object of this area. The equations required are:

$$p = KV^{n}$$

$$V = \left(\frac{p}{K}\right)^{\frac{1}{n}}$$

$$Z = \frac{V}{A}$$

For plates of various sizes, a direct solution of Z can be obtained. For wheels, the solution becomes much more complicated because the effective contact area of a wheel changes with the amount of sinkage.

The load-flow approach employs a method of successive approximations in solving this problem for a wheel. This will be described in detail later. In developing a formula for motion resistance or towing force, the load-flow approach employs an energy-volume relation which will presently be described. The initial derivation for both sinkage and towing force is

based on the assumption of a rigid wheel in order to simplify the wheel geometry. It is recognized, however, that this simplifying assumption is not adequate for handling pneumatic tires, and the load-flow is therefore developed in such a manner as to permit adjustments in wheel geometry necessitated by the deformation of the tire as it travels in the soil.

Derivation of Basic Formula for Towing Force

Assume that pulling a rigid wheel forward causes a flow of soil (displacement involving compaction, consolidation, shear, etc.) which is analogous to a consecutive series of increments of displacement by vertically applied penetrating elements:

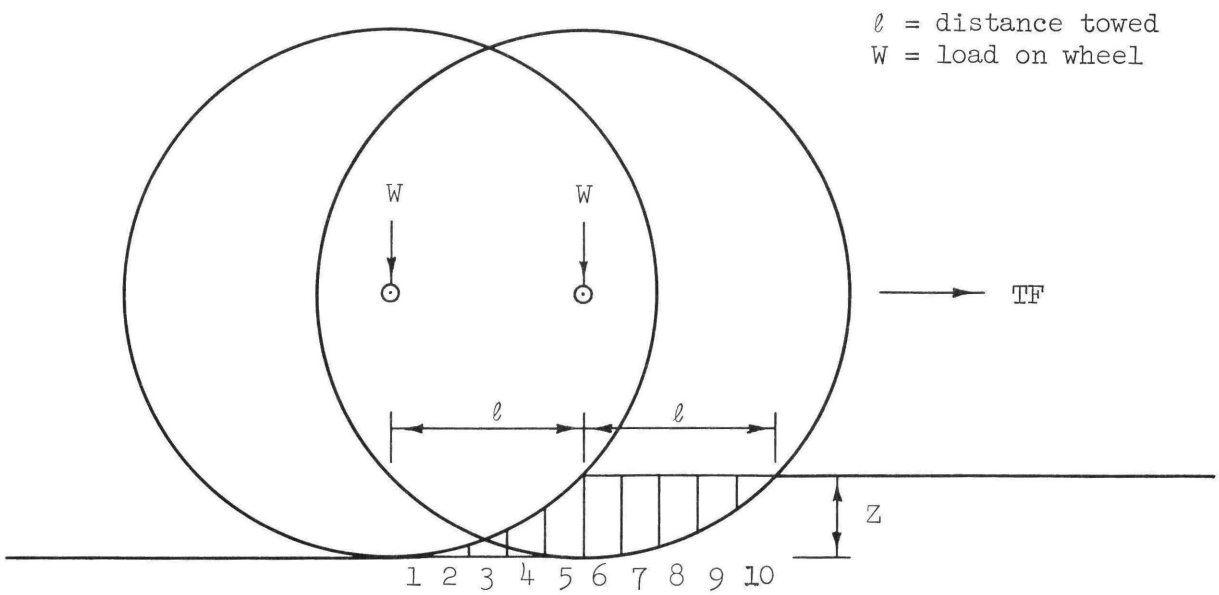

Fig. 1

This is illustrated in fig. 1 where a rigid wheel is pictured as being towed from position 1 to position 2. It is assumed that the net volume of soil displaced by the wheel as it rolls forward can be represented by a consecutive series of elementary vertical elements, for example,

1 through 10, as indicated. Next, it is assumed (fig. 2) that the arc of the tire circumference from the point where it contacts the soil to a point directly beneath the axle can be represented by a chord, and further that

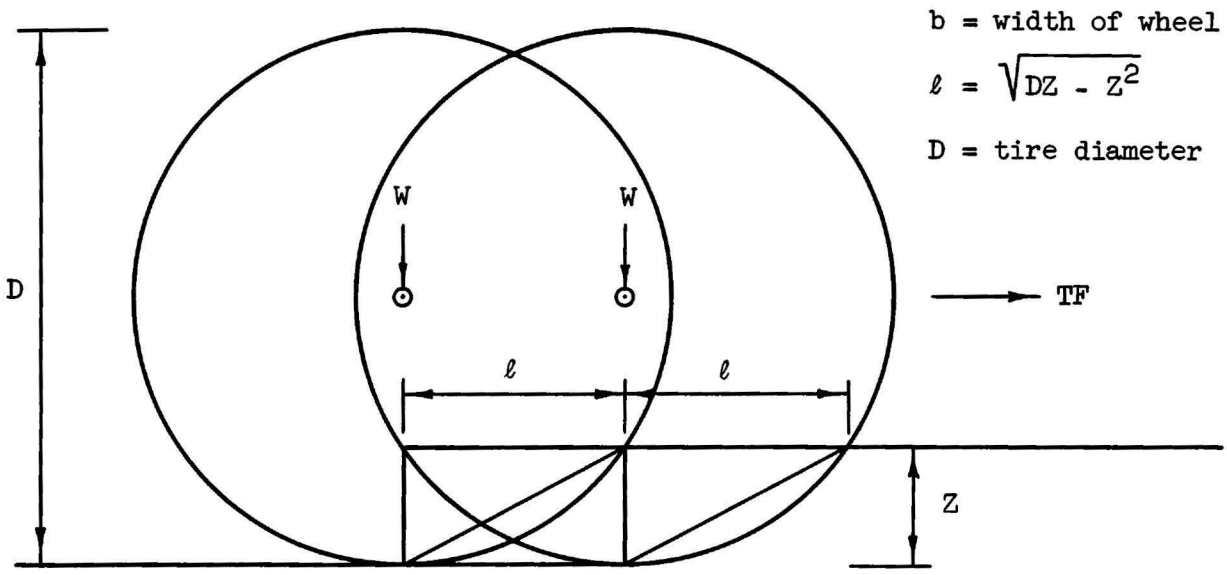

Fig. 2

the effective horizontal contact area beneath the wheel, as it moves forward displacing the soil, can be represented by the projected area b times ℓ, and the effective contact area on a vertical section where the wheel is making its rut can be represented by the projected area b times Z.

Referring now to fig. 3, it is assumed that the wheel is towed forward a distance, ℓ, which is the distance from a point directly under the center of the axle to the point where the front of the wheel contacts the original soil surface. In so doing, a volume of soil represented by the parallelepiped BCED of width b is displaced. Now it is evident from the geometry that the volume of the parallelepiped BCED of width b is equal to the volume of the rectangular prism ABCD of width b. From a

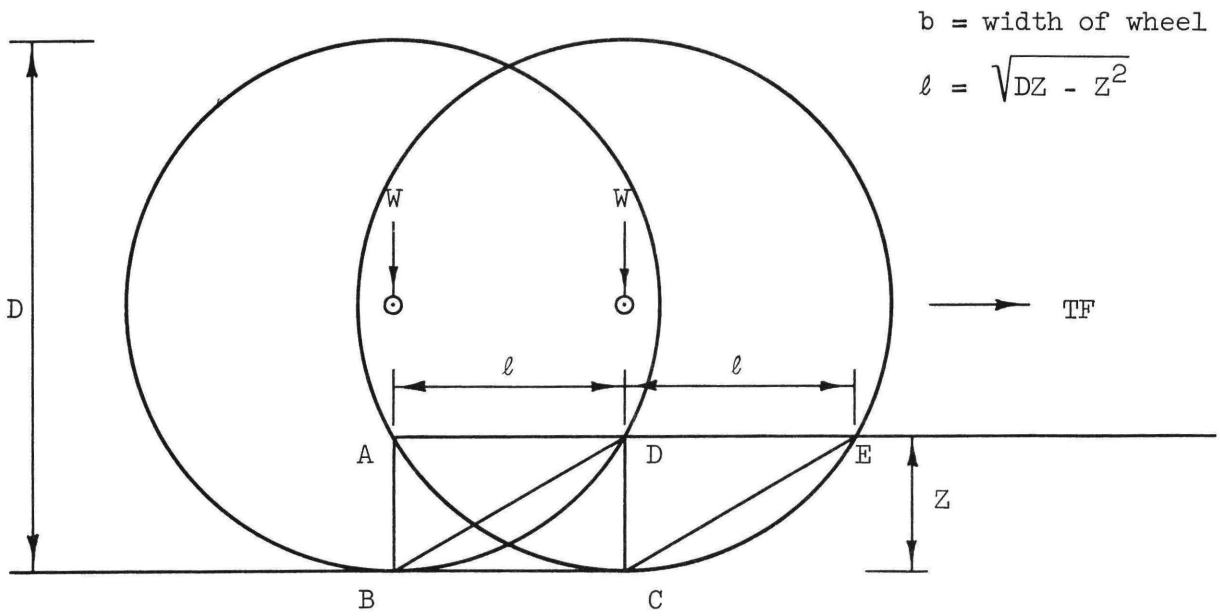

Fig. 3

geometrical viewpoint the relation of the various volumes under discussion may be further described as follows. As the wheel is towed through distance ℓ, it causes triangular volumes BCD and CDE (each of width b) to be displaced; now triangular volume CDE (width b) is equal to triangular volume ABD (width b). Therefore:

$$BCD + CDE = BCD + ABD$$

Or, in other words, the volume displaced by towing force, TF, acting over area $b \cdot Z$ through horizontal distance ℓ is equivalent to the volume displaced by load W acting over area $b \cdot \ell$ through vertical distance Z. This volume can be expressed as $V = b \cdot \ell \cdot Z$. Now it is also evident from the geometry of the wheel that ℓ and Z vary simultaneously and that the equilibrium condition with regard to sinkage and the

equilibrium condition with regard to towing force must be reached simultaneously since the towing force, TF , will only become constant when the wheel sinkage Z is constant, and both of these will only become constant when the soil is in a steady state of displacement or flow (dynamic equilibrium) at its ultimate strength under the dynamic condition imposed by the wheel. This means that hypothetically speaking the TF will reach dynamic equilibrium when the wheel has traveled distance ℓ , at which time the W versus sinkage curve will also have reached equilibrium at depth Z . The stress-strain curves for these hypothetical conditions are illustrated in figs. 4 and 5, respectively. Actually, of course, these two

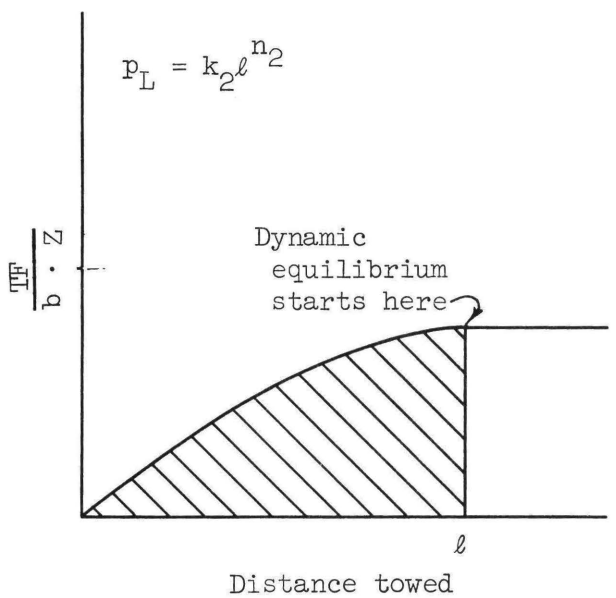

Hypothetical pressure versus distance curve

Fig. 4

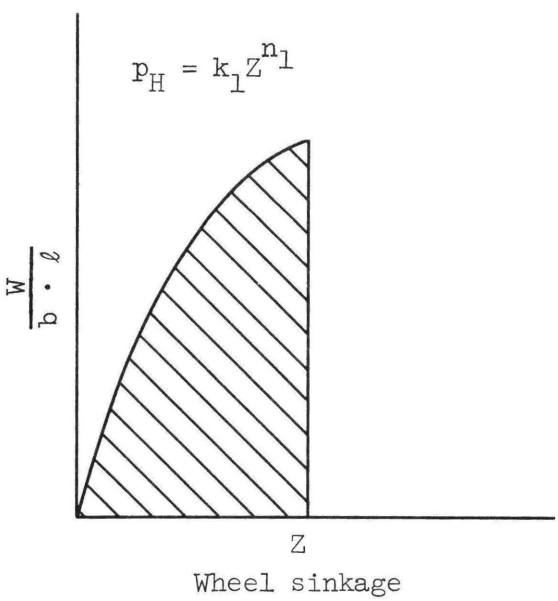

Hypothetical pressure versus sinkage curve

Fig. 5

phenomena cannot physically be isolated and measured independently as indicated by the stress-strain curves of figs. 4 and 5; however, for clarity of presentation of the theoretical picture it is convenient to present them in this manner.

Having established, as outlined above, a basis for the assumption that the TF versus distance curve should reach a constant value for TF at distance ℓ coincident with the wheel having found equilibrium at depth Z , it is now desired to proceed with the derivation of a formula for the towing force.

It is desired to relate the load, energy, and volume for plate tests to the load, energy, and volume for the wheel, and obtain an expression for the towing force TF required to tow the wheel.

Let ψ_A = energy per unit area of any penetrating element, then ψ_A = area under the p versus Z curve.

$$\psi_A = \int_0^Z p\,dZ = \int_0^Z kZ^n dZ = \frac{kZ^{n+1}}{n+1}$$

$$\psi_A = \frac{(k \cdot Z^n)\, Z}{n+1} = \frac{p \cdot Z}{n+1}$$

Total energy $\psi_T = \psi_A$ times effective area A .

$$\psi_T = \psi_A \cdot A = \frac{p \cdot A \cdot Z}{n+1} = \frac{p \cdot V}{n+1}$$

Energy per unit volume = $\psi_v = \frac{\psi_T}{V} = \frac{p}{n+1}$

$$\frac{p}{\psi_v} = n + 1 \quad \text{or} \quad \frac{p}{\psi_v} = \text{constant, C}$$

Now derive an expression for the total energy ψ_T expended while towing a wheel forward a distance ℓ , starting at a hypothetical zero

stress-strain condition of attaining dynamic equilibrium at distance ℓ (see again fig. 4).

$$p_L = k_2 \ell^{n_2}$$

$$\psi_{AL} = \int_0^{\ell} p_L d\ell = \int_0^{\ell} k_2 \ell^{n_2} d\ell = \frac{k_2 \ell^{n_2+1}}{n_2 + 1} = \frac{(k_2 \ell^{n_2})\, \ell}{n_2 + 1} = \frac{p_L \cdot \ell}{n_2 + 1}$$

$$\psi_T = \psi_{AL} \cdot \text{area} = \frac{p_L \cdot \ell\, (b \cdot Z)}{n_2 + 1} = \frac{p_L \cdot V}{n_2 + 1} = \frac{\frac{TF}{\cancel{b} \cdot Z}\, \cancel{b} \cdot \ell \cdot \cancel{Z}}{n_2 + 1} = \frac{TF \cdot \ell}{n_2 + 1}$$

Now derive an expression for the total energy in terms of sinkage of the wheel, Z, and load, W, again starting at a hypothetical zero stress-strain condition (p_H) and attaining equilibrium at depth Z. See again fig. 5.

$$p_H = k_1 Z^{n_1}$$

$$\psi_{AH} = \int_0^{Z} p_H dZ = \int_0^{Z} k_1 Z^{n_1} dZ = \frac{k_1 Z^{n_1+1}}{n_1 + 1} = \frac{p_H Z}{n_1 + 1}$$

$$\psi_T = \psi_{AH} \cdot \text{area} = \frac{p_H Z\, (b \cdot \ell)}{n_1 + 1} = \frac{p_H \cdot V}{n_1 + 1} = \frac{\frac{W}{\cancel{b} \cdot \cancel{\ell}}\, \cancel{b} \cdot \cancel{\ell} \cdot Z}{n_1 + 1} = \frac{W \cdot Z}{n_1 + 1}$$

Therefore

$$\frac{TF \cdot \ell}{n_2 + 1} = \frac{W \cdot Z}{n_1 + 1}$$

Now if it is assumed that n is constant regardless of the direction of loading, i.e. $n_1 = n_2$, then

$$TF = \frac{W \cdot Z}{\ell}$$

However, if n is assumed to have one value for loading in the horizontal direction and another value for loading in the lateral direction, then the following derivation is applicable:

It was shown earlier that $n + 1 = \frac{p}{\psi_v}$

Making this substitution for $n + 1$, we obtain

$$\frac{TF \cdot \ell}{\frac{p_L}{\psi_v}} = \frac{W \cdot Z}{\frac{p_H}{\psi_v}}$$

From which

$$TF = \frac{W \cdot Z}{\ell} \frac{(p_L)}{(p_H)}$$

At the present time no method is available for determining the ratio $\frac{p_L}{p_H}$, and therefore the formula $TF = \frac{W \cdot Z}{\ell}$ is used without the benefit of this correction factor.

Description of Procedure for Predicting Sinkage of a Rigid Wheel

The formula for towing force, TF, derived above, is of limited practical usefulness unless the sinkage, Z, of the wheel can be predicted. A procedure for predicting the sinkage of a single wheel of known size and loading has been developed and will be described presently. As already stated, the relation between load and volume of soil displaced by a penetrating object can be reasonably described by the expression $p = KV^n$ if the readings of p versus V at shallow penetrations, say 1 in. or less, are ignored in establishing the slope of the p versus V curves. Ignoring this early part of the stress-strain curve is not considered to be an arbitrary action; rather it is believed justifiable on the basis of the argument that the sinkage phenomenon for wheels is best characterized by the stress-strain relation in the region well beyond the conventional plate test yield point, and consequently it is better to establish the slope of

the curve in this region and project the curve back on the basis of this slope. In this connection consideration is being given to the use of curved plates or wheels for the penetration tests, the thought being that these curved plates or wheels may introduce shear in the soil more characteristic of wheels. In other words, a rigid plate penetration test does not necessarily produce a valid stress-penetration relation for use with wheels. The load-flow concept appears to work quite well when this early part of the plate test curve is minimized and the portion beyond the yield point is used to establish the slope of the curve. The most logical question then is not whether the load-flow theory is valid, but whether a different type testing device that would move directly into the type of shear represented by the region beyond the yield point would be more applicable in predicting performance of wheels in soil.

It will be necessary for the time being, however, to use plate-test data since these are the only data available. In the following description of the procedure for predicting sinkage, the simplifying assumption is made that the maximum sinkage occurs under the center of the axle. (Test measurements show that the maximum sinkage in dry sand on the first pass of a pneumatic-tired wheel has occurred some distance back of the center of the axle. The position will vary with soil strength, tire deflection, load, etc., and an empirical method has been developed for obtaining the corrected maximum values; however, an explanation of this will be deferred for the sake of clarity.) Also it is pointed out that while three plate tests (1.4-in. diameter, 2.8-in. diameter, and 4.2-in. diameter) are used for this illustration, it has been found that the theoretical predictions are better when the results of the smallest plate (1.4-in. diameter) are

ignored, and this has been done in the presentation of the actual results later in this report. This points up the need for careful attention to the testing devices, and the development of devices and techniques that will best represent actual wheels.

The steps in the procedure for predicting sinkage of a rigid wheel by the load-flow concept are as follows:

1. First, assume that the effective area for a wheel as it moves forward in loose soil can be represented, as in fig. 6, by the projected area $b \cdot \ell$ of the area formed by chord XY and wheel width b .

   It can be shown by geometry that $\ell = \sqrt{DZ - Z^2}$, as indicated in fig. 6, where ℓ is the distance from the point where the soil

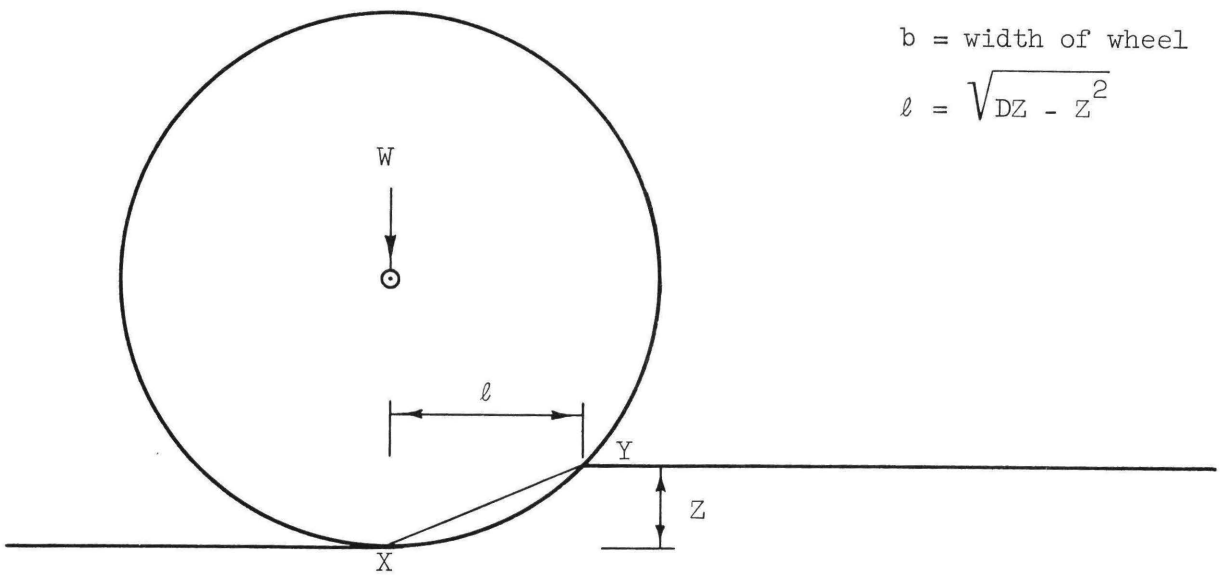

Fig. 6

touches the front of the wheel to the center of the axle, D is the outside diameter of the wheel, and Z is the depth of sinkage of the wheel. It has already been shown that as the wheel rolls forward a distance ℓ , the volume of soil displaced

can be represented by the effective area $b \cdot \ell$ times the sinkage Z. Therefore, moving the wheel forward a distance ℓ amounts to essentially the same thing as load W acting over area $b \cdot \ell$ and sinking to depth Z.

2. Conduct plate penetration tests using circular plates of three different diameters.

3. Plot unit pressure versus the volume of soil displaced (area of plate times depth of penetration) for each plate on log paper, as in fig. 7.

   Ignore the points below 1-in. penetration in establishing the slope of these curves, and draw the best average common slope for these curves. (Note that these curves represent the equation $p = KV^n$ where K is the p intercept at V = unity, and n is the slope of the curve.)

4. It is evident from fig. 7 that K is a function of the area of

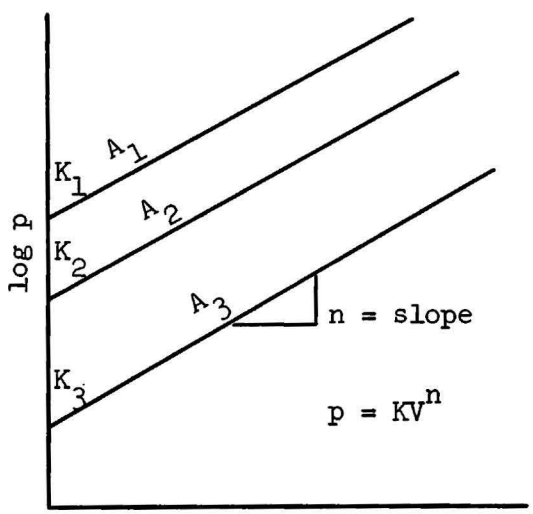

Fig. 7

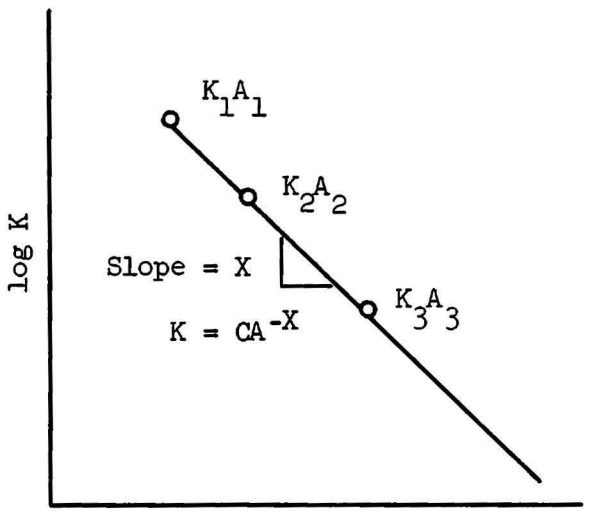

Fig. 8

the penetrating element. Plot on log paper the K values read from fig. 7 against their corresponding plate areas, and this relation will be found to be essentially a straight line as in fig. 8. Project this straight line to permit extrapolation of K values for larger areas.

5. Make a first estimate of the effective contact area of the wheel. Any reasonable estimate is satisfactory. In the absence of any other basis for the estimate, it is suggested that the square of the tire width (b^2) be used.

6. Using this estimated area, read a corresponding K value from the curve of K versus A as shown in fig. 8.

7. Since the load, W , on the wheel is known, calculate the unit pressure, p , that would correspond to this estimated area as follows:

$$p_{est} = \frac{W}{A_{est}}$$

8. Obtain the value of n from the data in fig. 7 (n is constant for all values of area).

9. Using the value for p_{est} , K_{est} , and n as determined above, solve for V_{est} as follows:

$$p_{est} = K_{est} V_{est}^{n}$$

$$V_{est} = \sqrt[n]{\frac{p_{est}}{K_{est}}}$$

10. Now solve for Z_{est} as follows:

$$Z_{est} = \frac{V_{est}}{A_{est}}$$

11. Now solve for ℓ_{est} as follows:

$$\ell_{est} = \sqrt{DZ_{est} - Z_{est}^2}$$

12. Now calculate an area using this value of ℓ as follows:

$$A_{cal} = b \cdot \ell_{est}$$

13. Plot the value of A_{est} versus the value A_{cal} as in fig. 9.

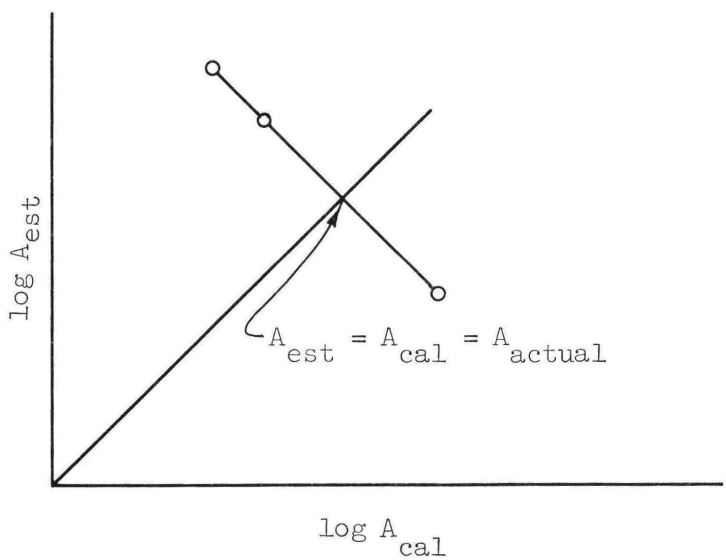

Fig. 9

14. Repeat steps 12 and 13 for calculated area corresponding to assumed area for two other points, and plot as in fig. 9.

15. From fig. 9 read the value for the area where $A_{cal} = A_{est}$. This is the actual area for the tire that satisfies both the soil properties and the wheel geometry.

16. Use A_{actual} to solve for actual predicted sinkage, Z_{actual}, as follows:

$$p_{actual} = \frac{W}{A_{actual}} = K_{actual} V^{n}_{actual}$$

$$V_{actual} = \sqrt[n]{\frac{p_{actual}}{K_{actual}}} \quad ; \quad Z_{actual} = \frac{V_{actual}}{A_{actual}}$$

Application of the Load-Flow Theory to Pneumatic Tires

Description and brief summary of moving chord method

In the development of the basic theory, a rigid wheel has been assumed in order to simplify the problem; however, solutions for rigid wheels are of no real practical benefit as such, and the necessary steps for application to pneumatic-tired wheels must be taken. It is in this area that the greatest need exists for refinements that will permit the tire geometry to be better defined under dynamic conditions in the soil in order that the theoretical concept can be utilized to the fullest extent. To put it simply, it is necessary to determine with reasonable accuracy the volume of the soil displaced by a tire of width b in traveling a distance ℓ, where ℓ is the length of the horizontal projection of the effective tire contact area. AMRC experimental results indicate that the pneumatic tire takes the following general configuration (fig. 10).

At present an approximation of the tire geometry is obtained by the "moving chord method," which is used in conjunction with the method of successive approximations already described. The moving chord method is as follows (fig. 11).

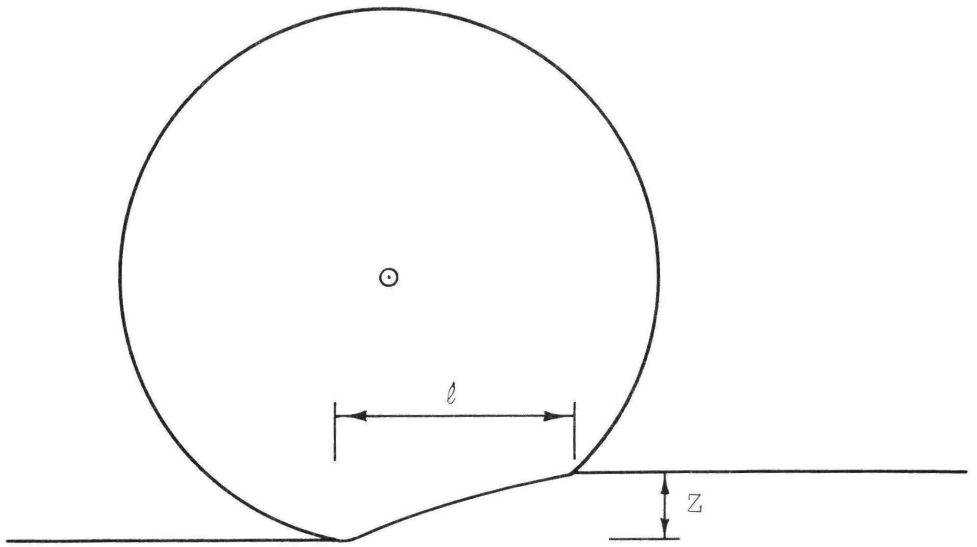

Fig. 10

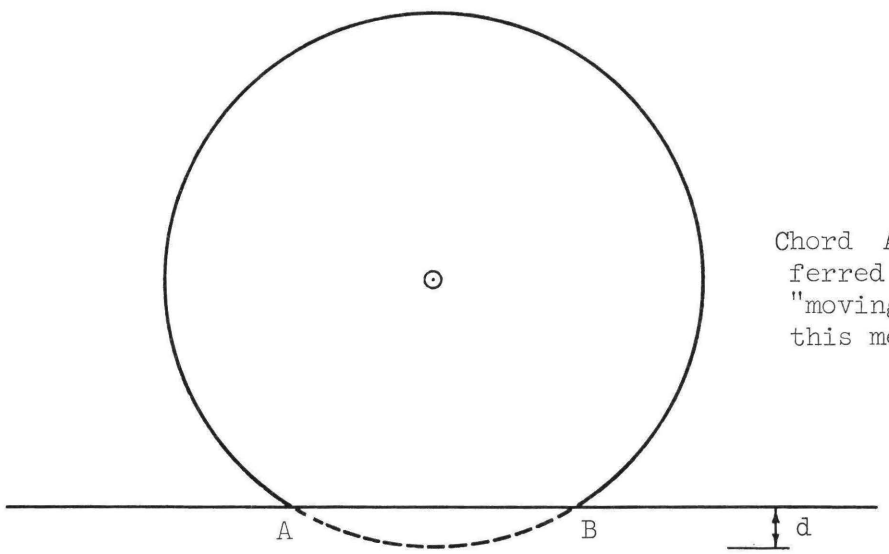

Chord AB is referred to as the "moving chord" in this method

Fig. 11

1. Determine the length of a chord, AB , that cuts the periphery of the undeflected tire at deflection, d , as indicated above. Use the rim width as the effective width of the tire.
2. In estimating the contact area for use in the method of successive approximations, anchor the front end of the moving chord

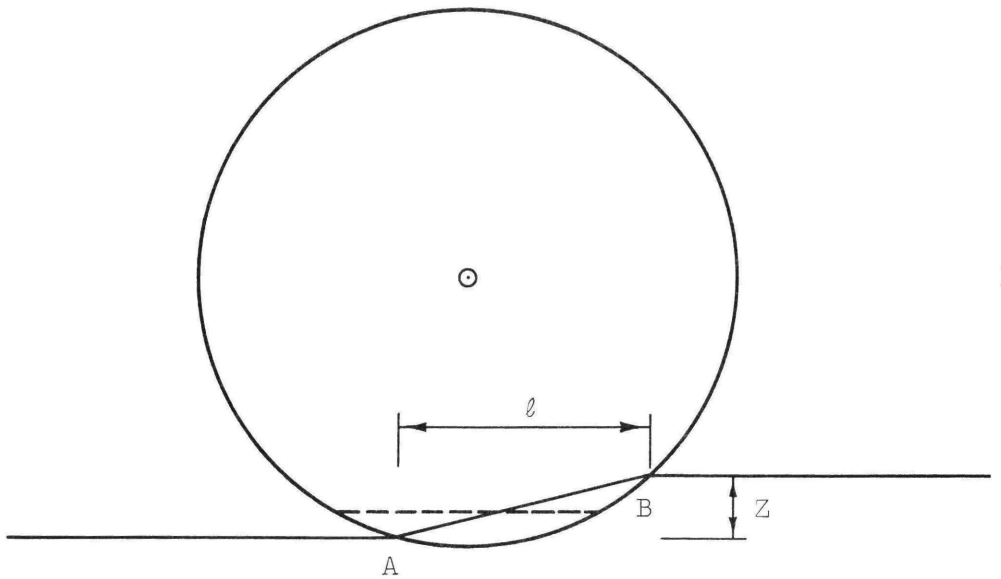

Fig. 12

length at an assumed ground surface (unless the estimated sinkage is so deep that the chord length is exceeded) and let the rear end cut the OD tire circumference wherever it happens to do so. This is illustrated above (fig. 12).

3. If the estimated sinkage is so deep that the rear end of the chord would pass beyond a vertical line through the center of the axle, then the rigid wheel formulas are used. (See fig. 13.)

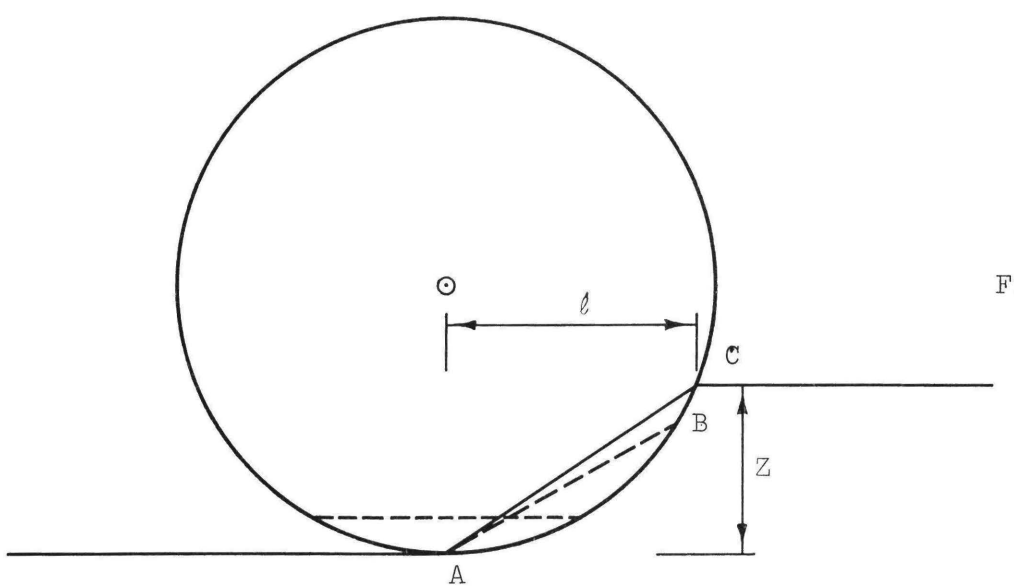

Fig. 13

The moving chord method can be solved either graphically or analytically. We have programmed the entire load-flow solution on the digital computer, and have completed the calculations of predicted sinkage and towing forces or motion resistance for all tires in the AMRC dry Yuma sand tests.

Detailed outline of
the moving chord method

The following is a detailed outline of the steps involved in predicting the sinkage of a pneumatic-tired wheel by the moving chord method.

1. Plot pressure versus volume from plate penetration tests as in fig. 14.
2. Plot K (intercepts from fig. 14) versus plate area as in fig. 15.

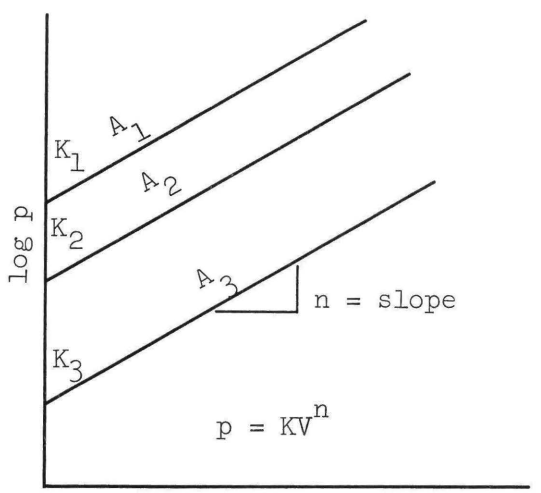

Fig. 14

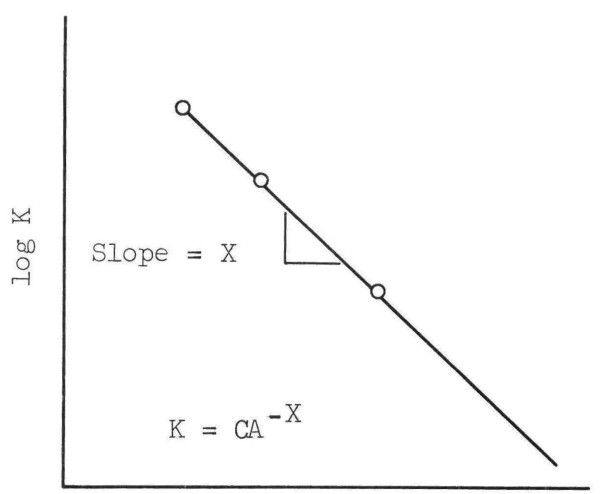

Fig. 15

3. Make an estimate of the contact area for the tire, A_{est} .
4. Calculate an estimated pressure from the load and A_{est} ,

$$P_{est} = \frac{W}{A_{est}} .$$

5. Using this estimated area calculate a K_{est} from the relation outlined in step 2 on the preceding page.

6. Knowing n from step 1 on the preceding page and using K_{est} and P_{est}, it is possible to solve for an estimated value of volume as follows:

$$P_{est} = K_{est} V_{est}^{n}$$

$$V_{est} = \sqrt[n]{\frac{P_{est}}{K_{est}}}$$

7. It is now possible to obtain an estimated value of sinkage as follows:

$$Z_{est} = \frac{V_{est}}{A_{est}}$$

8. Calculate the hard-surface contact length, $\ell_{HS} = 2\sqrt{Dd - d^2}$ (fig. 16).

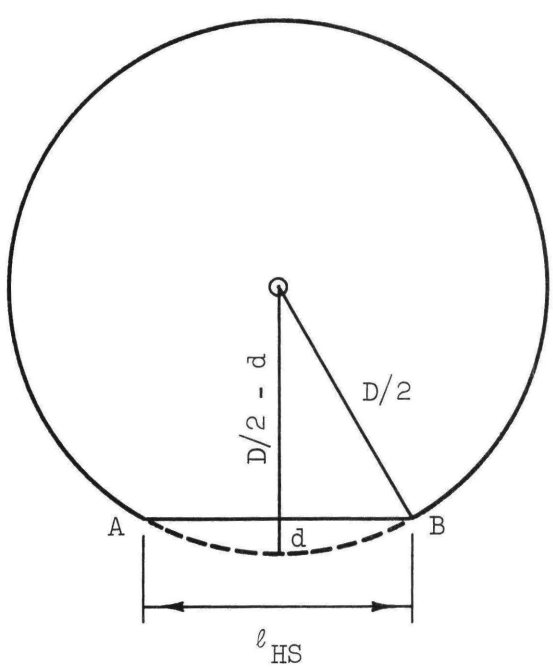

$$\ell_{HS} = 2\sqrt{Dd - d^2}$$

Fig. 16

9. Calculate the length of the chord connecting the point where the ground surface intersects the tire periphery with a point on the undeflected tire directly underneath the axle (A'C in fig. 18) as follows:

$$A'C = \sqrt{DZ_{est}}$$

10. Compare the length of the chord computed in step 9 above, which is the limiting case, with ℓ_{HS} from step 8 on the preceding page to decide whether Case I or Case II is to be used in the calculation of contact length, ℓ . If the length of the limiting chord from step 9 above is less than ℓ_{HS} , Case I (fig. 17) is in effect. If the limiting chord is equal to or greater than ℓ_{HS} then Case II (fig. 18) is in effect.

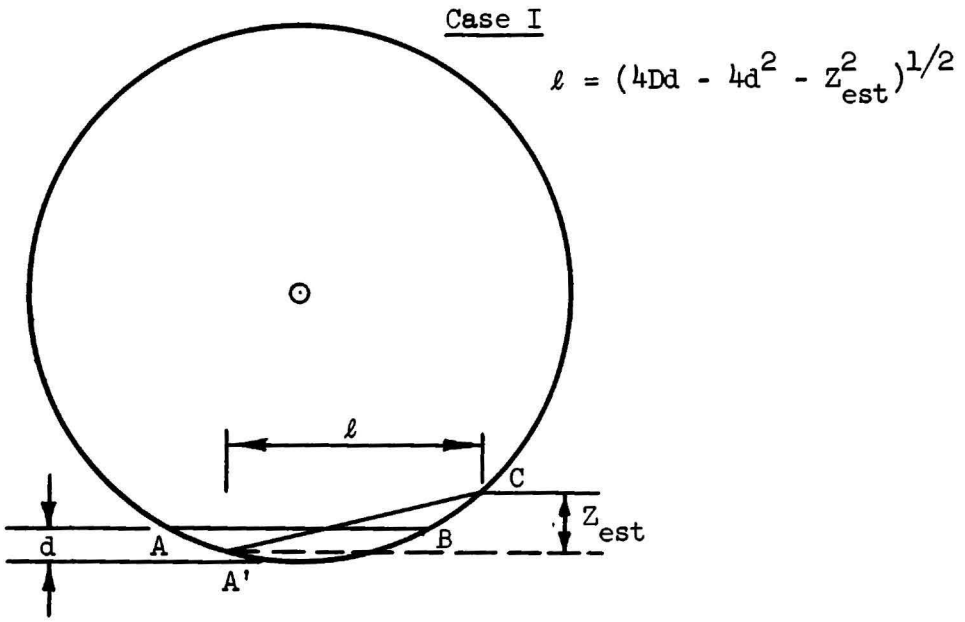

Fig. 17

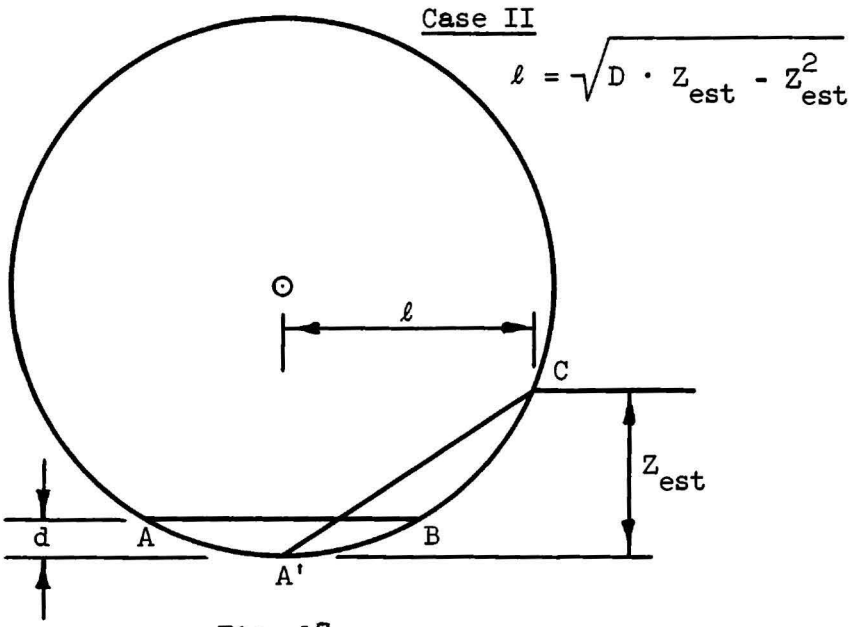

Fig. 18

11. Continue by calculating the contact length, ℓ , by the appropriate formula, i.e. Case I or Case II, whichever is applicable.

12. Calculate the corresponding area, $A_{cal} = b \cdot \ell_{est}$.

13. Repeat steps 3 through 12 for two additional estimated areas and plot $\log A_{est}$ versus $\log A_{cal}$ as in fig. 19.

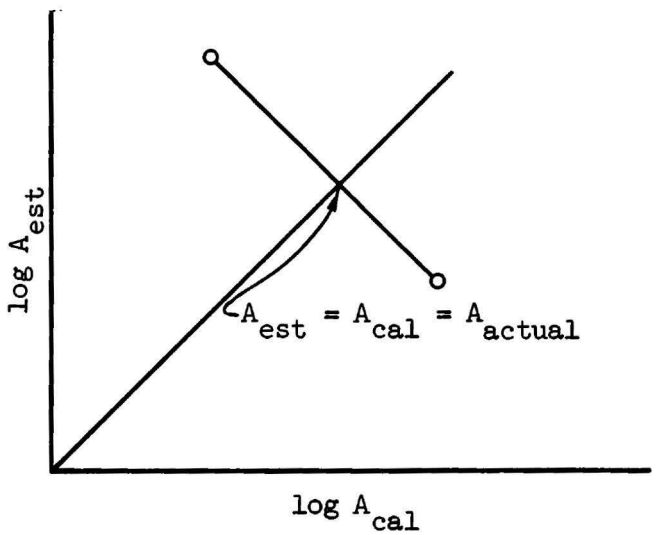

Fig. 19

14. Determine from fig. 19 the value of $A_{actual} = A_{cal} = A_{est}$.

15. With the actual contact area that satisfies the conditions of geometry, soil, and loading that have been introduced, steps 4 through 7 should be repeated one additional time with all the subscripts changed to actual to obtain a prediction of the sinkage.

Results of Application of Load-Flow Theory to Pneumatic Tires in Dry Sand

The relation of measured values of sinkage and towing force to values predicted by the load-flow theory is shown in figs. 20 and 21, respectively. Please note the wide range of variables encompassed both in the tires used and in the soil. As indicated there are eight different tire sizes; the tire deflections were varied from 15 to 35% (inflation pressures ranged from 3 to 93 psi); and wheel loads ranged from 200 to 1200 lb. Soil strength was varied from 20 to 60 cone index. In view of the wide range of variables covered by the tests these theoretical predictions are considered to be most encouraging. Further, it is believed that immediate improvement should be sought, not in the basic theoretical concept, but in two other principal areas, namely: (1) a testing device that simulates the action of a wheel better than the plate penetrators used here; and (2) improved means of accurately determining the volume of soil displaced by a wheel.

Summary and Conclusions

The energy-per-unit-volume concept (total energy expended during penetration divided by the net volume of soil displaced) is considered by

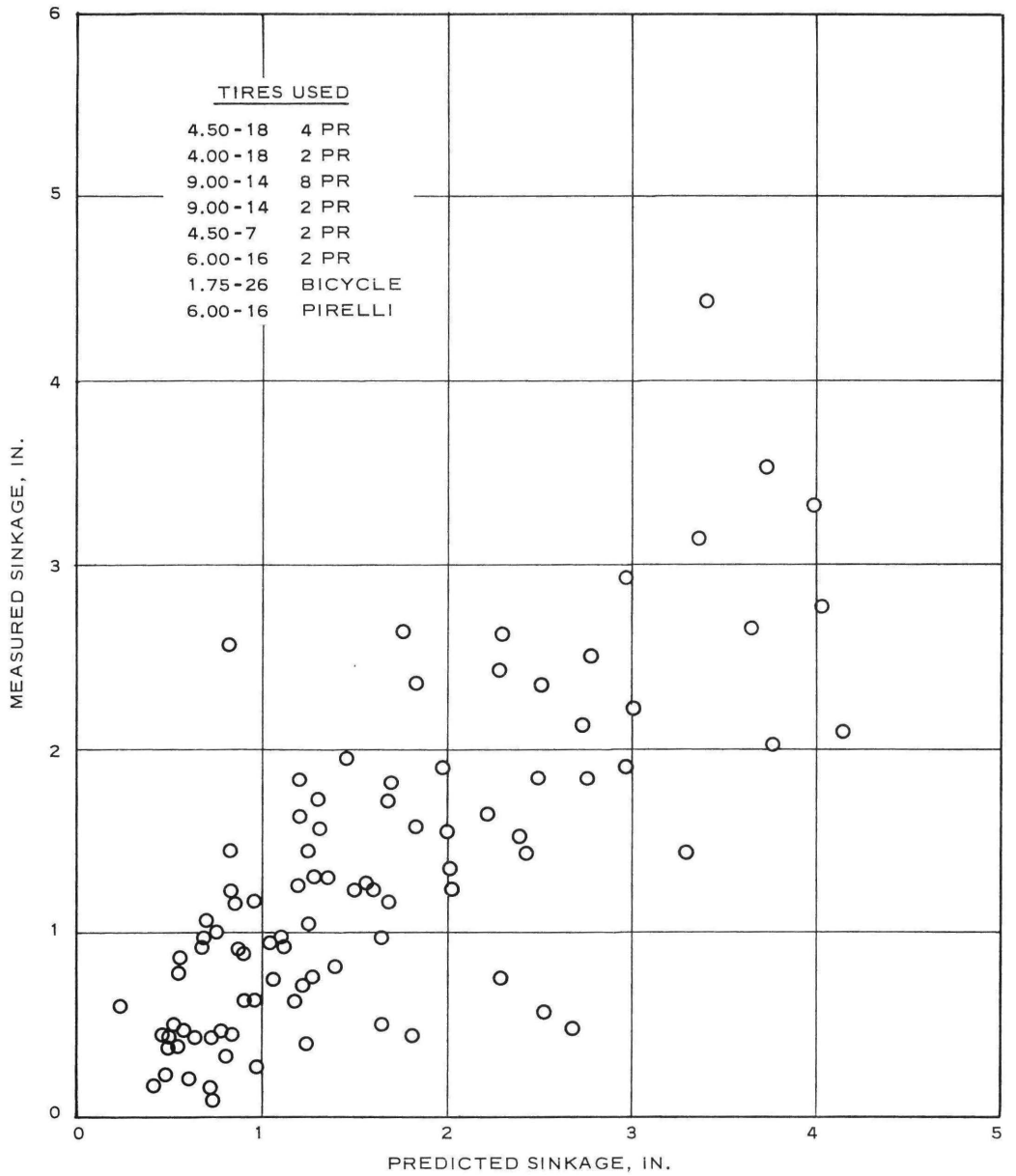

NOTE: TIRE DEFLECTION RANGE, 15 TO 35%.
SAND STRENGTH RANGE, CI = 20 TO CI = 60 (APPROX).
LOAD RANGE, APPROX 200 TO 1200 LB.
INFLATION PRESSURE RANGE, APPROX 3 TO 93 PSI.

Fig. 20. Measured versus predicted sinkage, load-flow theory

30577

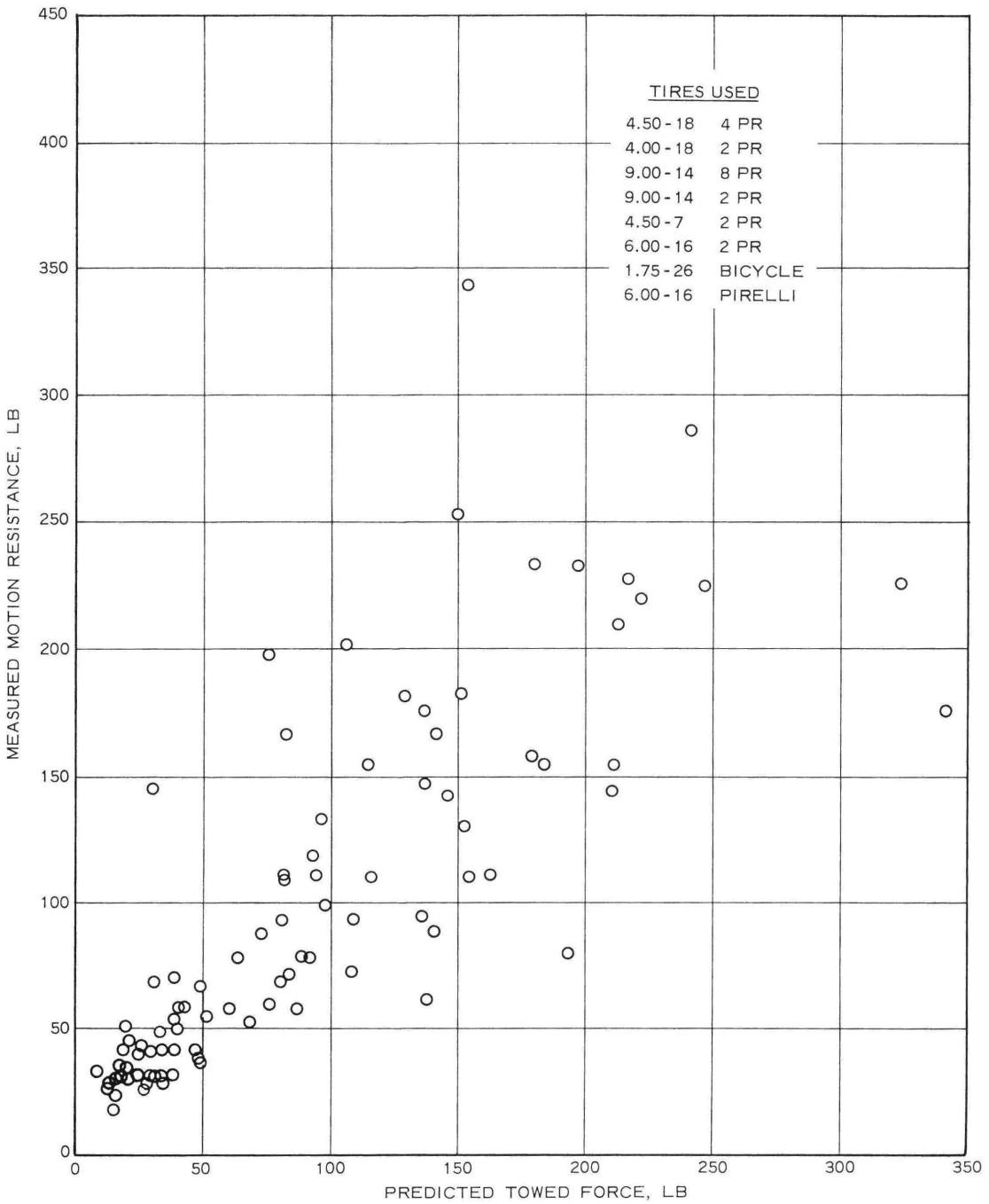

NOTE: TIRE DEFLECTION RANGE, 15 TO 35%.
SAND STRENGTH RANGE, CI = 20 TO CI = 60 (APPROX).
LOAD RANGE, APPROX 200 TO 1200 LB.
INFLATION PRESSURE RANGE, APPROX 3 TO 93 PSI.

Fig. 21. Measured versus predicted towed force, load-flow theory

the author to be the most important feature of this paper. The actual shape of the sinkage curve for a moving wheel and the best mathematical expression for this curve are matters yet to be determined by experimentation. The shape assumed for the purposes of this paper should be considered only a tentative approximation used for convenience to obtain a first approximate solution. Whatever curve shape is found, however, it is believed that the energy-per-unit-volume relation will provide a useful means of dealing with the problem of gross shear and large volume displacements or "flow" of soil.

The reader should bear in mind that this paper has dealt only with the case of a towed wheel. The interrelation between a powered wheel and the soil is obviously much more complicated and is, of course, the problem that has to be ultimately dealt with in most practical vehicle-mobility considerations.

The author feels that the energy-per-unit-volume concept will be useful in dealing with both the towed wheel and the powered wheel.

While nothing has been said of tracks, it is thought that the basic consideration covered in this paper will also be applicable to tracks.

Finally, it should be recognized that in addition to the need to determine the actual shape of the sinkage curve for a wheel or track, a testing instrument needs to be devised that will simulate this shape and provide suitable test data for use in predicting vehicle performance.

ACKNOWLEDGMENT

The author is especially grateful to Col. Alex G. Sutton, Jr., Director of the U. S. Army Engineer Waterways Experiment Station

for encouragement to publish this paper.

The mobility investigational program of the Waterways Experiment Station is sponsored by the U. S. Army Materiel Command through its representative, Mr. R. R. Philippe. This research program is under the immediate direction of the following WES staff engineers, Mr. W. J. Turnbull, Chief of the Soils Division, Mr. W. G. Shockley, Chief of the Mobility and Environmental Division, Mr. S. J. Knight, Chief of the Army Mobility Research Branch, and Mr. D. R. Freitag, Chief of the Mobility Section.

The author is indebted to Dr. M. J. Hvorslev for his stimulating criticism. A valuable contribution was made by Mr. J. L. Smith who assisted with the mathematics and set up the electronic computer program for all calculations for the tests in sand and prepared figs. 20 and 21.

The measured sinkage values shown in figs. 20 and 21 are maximum values based on a formula developed by Miss Mary Elizabeth Smith who also gave advice and assistance with the mathematics.

The author is particularly indebted to Dr. B. Noble of the U. S. Army Mathematics Research Center, located at the University of Wisconsin, for correcting the original equation for the distance ℓ for pneumatic tires in soft soil. The equation for ℓ on page 22 of this paper was derived by Dr. Noble and represents a great simplification and more direct means of obtaining the desired sinkage value than the equation originally used by the author.

APPENDIX A

A MATHEMATICAL THEORY FOR LOAD-PENETRATION RELATIONS FOR SOME IDEALIZED MATERIALS

This is a mathematical theory for load-penetration or load-sinkage relations in certain idealized materials whose load-sinkage curves can be represented by a power function of the general form $y = aX^n$. These load-sinkage curves can be conveniently represented by straight lines on log plots. Arithmetic plots of the four general shapes of load-sinkage curves considered in this theory are shown in figs. A1(a), (b), (c), and (d); log plots of these same curves are shown in figs. A2(a), (b), (c), and (d), respectively.

This theory deals with load-volume-energy relations wherein the load is the force acting on the penetrating element, the volume is the net volume of material displaced by the penetrating element (i.e. the effective area of the penetration times the distance penetrated), and the energy is the area under the load-sinkage curve. In order to keep this completely theoretical, no effort will be made to associate any of these load-sinkage curves with an actual physical material at this time, although these do bear definite relations. For the present purposes, they will be considered only from an idealized physical and mathematical point of view.

It is evident that any one of these curves can be represented by either of the following equations (see again fig. A2):

$$p = kZ^n \quad \text{(straight line on log plot)}^1 \tag{A1}$$

---

1. The original equation, $p = kZ^{1/2}$, was proposed by R. Bernstein, "Problems of Experimental Mechanics of Motor Ploughs," Der Motorwagen, No. 16, 1913. The equation, $p = kZ^n$, was proposed by M. N. Letoshnev, "Theory and Production of Agricultural Machinery," Moscow, 1936.

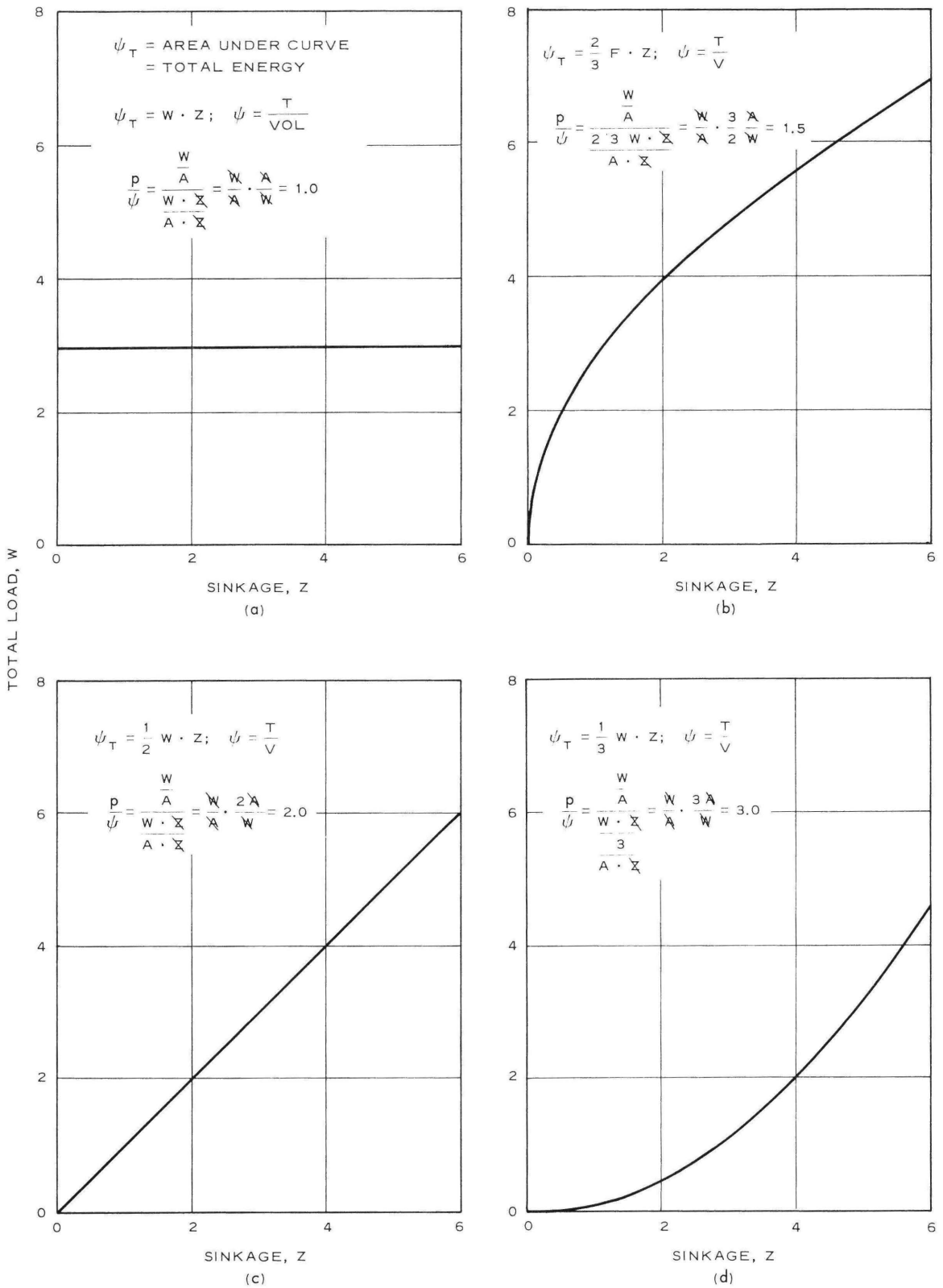

Fig. A1. Total load versus sinkage

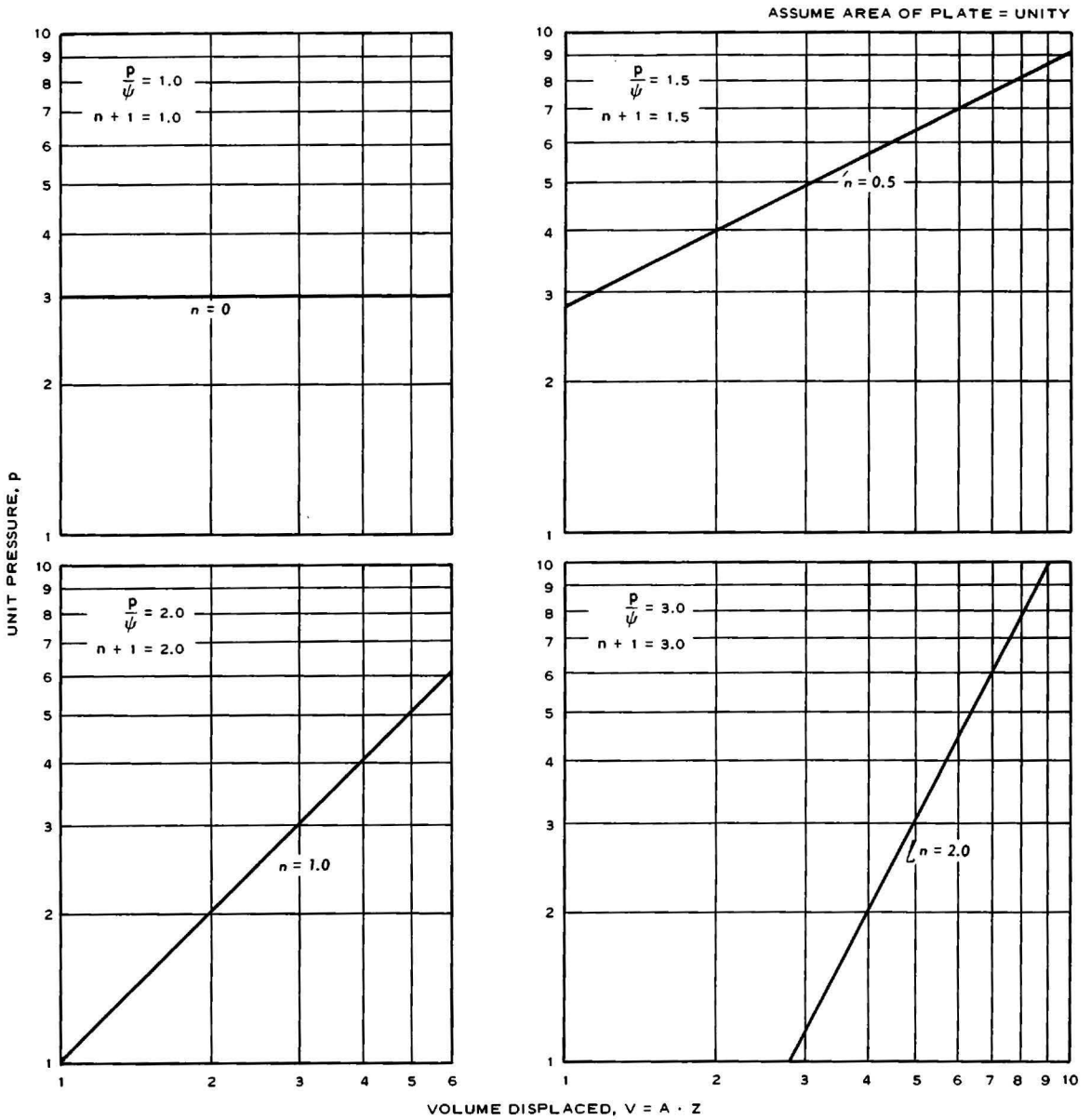

Fig. A2. Unit pressure versus volume displaced

$$p = KV^n \quad \text{(straight line on log plot)} \tag{A2}$$

where

p = unit pressure on the penetrator

Z = sinkage or distance penetrated

k = p intercept at Z = unity

K = p intercept at V = unity

V = volume = area of penetrator times distance penetrated

n = slope of curves for either equation

From equations 1 and 2:

$$KV^n = kZ^n$$

$$KV^n = KA^nZ^n = kZ^n$$

$$K = \frac{k}{A^n}$$

From which it is evident that K is a power function of A , or in other words, K versus A is a straight line on a log plot. This relation permits determination of K for any value of A once the relation is established by two or more penetration tests.

Now, if an object penetrates a material causing a volume displacement from V = 0 to V = V , the total external work done or total energy spent is:

$$\psi_T = \int_o^V p \cdot dV = \int_o^V KV^n dV = \frac{KV^{n+1}}{n+1}$$

Then the energy per unit volume

$$\psi V = \frac{\frac{KV^{n+1}}{n+1}}{V} = \frac{KV^n}{n+1} = \frac{p}{n+1}$$

This relation can, of course, also be derived as follows:

Let ψ_A = energy per unit area for any penetrating element = area under the p versus Z curve.

$$\psi_A = \int_o^Z p\,dZ = \int_o^Z KZ^n dZ = \frac{KZ^{n+1}}{n+1} = \frac{(K \cdot Z^n)\,Z}{n+1} = \frac{p \cdot Z}{n+1}$$

Let ψ_T = total energy = ψ_A times area of penetrating element.

$$\psi_T = \frac{P(Z \cdot A)}{n+1} = \frac{p \cdot v}{n+1}$$

Then the energy per unit volume = $\psi_V = \frac{p}{n+1}$

$$\frac{p}{\psi_V} = n + 1$$

From the above relations it is evident that p versus ψ_V is independent of area of penetrator and the slope is a constant (n + 1) . Curves of p versus ψ_V for four general shapes considered are presented in fig. A3. From this the following generalization can be drawn:

For a material whose load-penetration curve can be represented by either of the equations, $p = kZ^n$ or $p = KV^n$, the work per unit volume of penetration at a given contact pressure for a given material is a constant which is independent of the area of the penetrator. This can be stated in equation form as follows:

$$\frac{K_1 V_1^n}{n+1} = \frac{K_2 V_2^n}{n+1} \qquad \text{(at constant contact pressure and given shaped penetrator)}$$

$$K_1 V_1^n = K_2 V_2^n \qquad \text{(at constant contact pressure and given shaped penetrator)}$$

In conclusion, the author feels that the generalization stated above

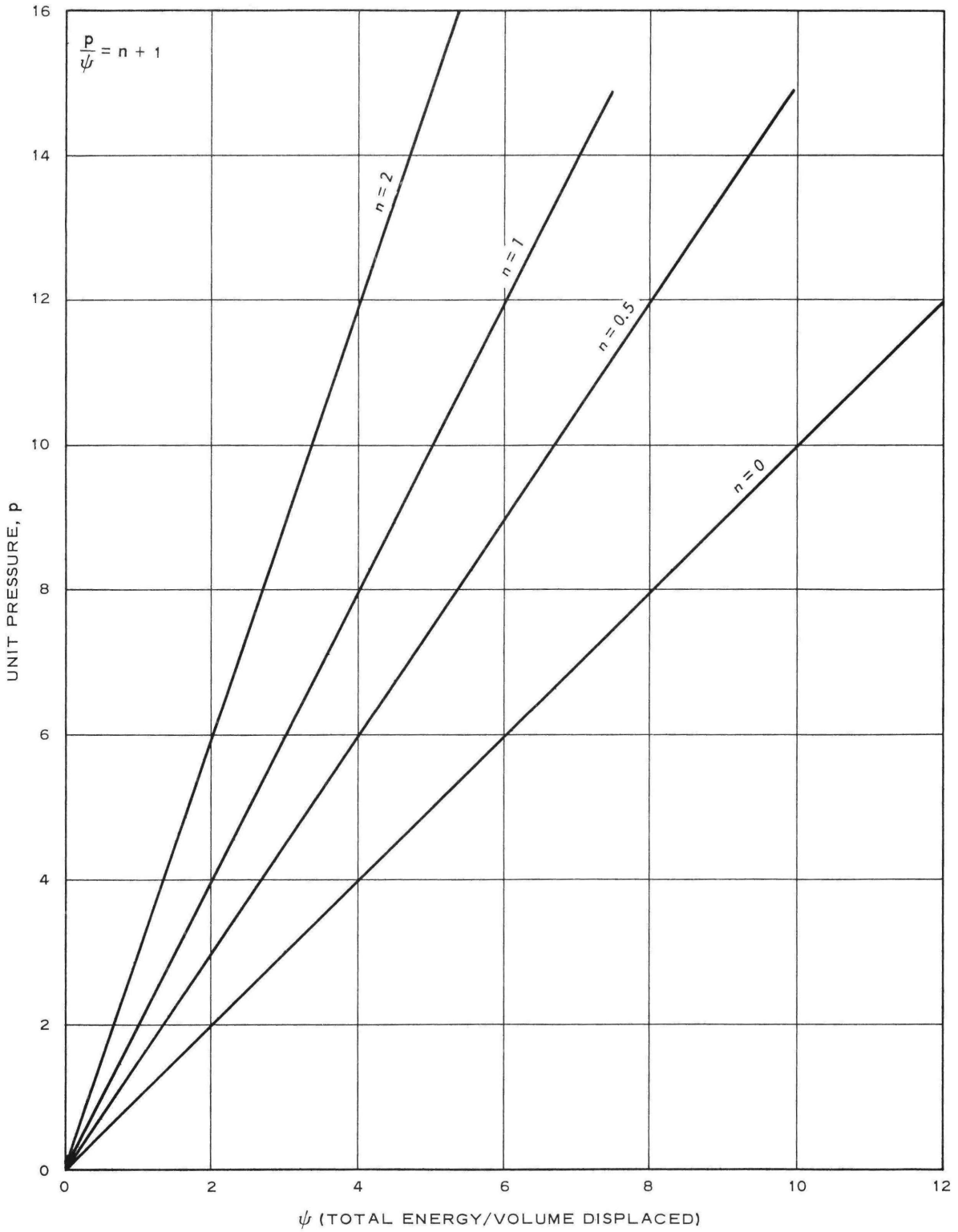

Fig. A3. Unit pressure versus energy per unit volume

regarding the relation of the applied pressure to the energy per unit volume displaced is more significant than the particular equations used to conveniently approximate the relation mathematically. It is suggested that a better correlation with actual experience may be found by using any means that more accurately determines the area under the actual load-sinkage curve.