MISCELLANEOUS PAPER S-73-28

PROPERTIES OF EXPANSIVE CLAY SOILS

Report 1

JACKSON FIELD TEST SECTION STUDY

by

L. D. Johnson

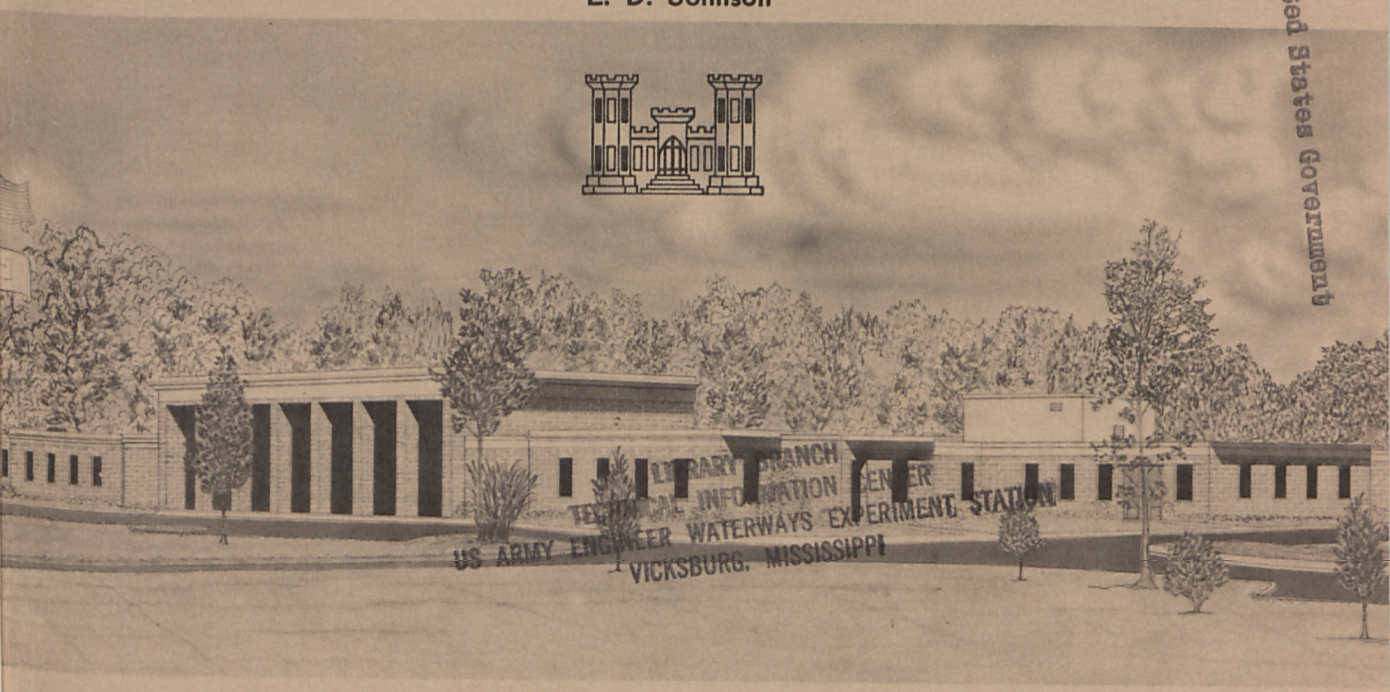

May 1973

Sponsored by Office, Chief of Engineers, U. S. Army and
U. S. Army Construction Engineering Research Laboratory

Conducted by U. S. Army Engineer Waterways Experiment Station
Soils and Pavements Laboratory
Vicksburg, Mississippi

MISCELLANEOUS PAPER S-73-28

PROPERTIES OF EXPANSIVE CLAY SOILS

Report I

JACKSON FIELD TEST SECTION STUDY

by

L. D. Johnson

May 1973

Sponsored by Office, Chief of Engineers, U. S. Army and
U. S. Army Construction Engineering Research Laboratory

Conducted by U. S. Army Engineer Waterways Experiment Station
Soils and Pavements Laboratory
Vicksburg, Mississippi

ARMY-MRC VICKSBURG, MISS

FOREWORD

The Jackson field test section is one phase of a continuing study under the project "Properties of Expansive Clay Soils." The project was started in 1967 under the sponsorship of the Office, Chief of Engineers, U. S. Army, Directorate of Military Construction. The initial studies were performed under the Operations and Maintenance, U. S. Army, program. These studies were continued in 1971-1972 under the Permanent Construction Materials and Techniques program through the U. S. Army Construction Engineering Research Laboratory. The Jackson studies through December 1970 are described in this report.

The project was under the general supervision of Messrs. J. P. Sale and R. G. Ahlvin, Chief and Assistant Chief, respectively, of the Soils and Pavements Laboratory, U. S. Army Engineer Waterways Experiment Station (WES), Vicksburg, Mississippi. This report was prepared by Dr. L. D. Johnson under the supervision of Messrs. C. L. McAnear, Chief, Soil Mechanics Section, and W. C. Sherman, Jr., Chief, Soil and Rock Mechanics Branch.

COL Levi A. Brown, CE, and COL Ernest D. Peixotto, CE, were Directors of the WES during the conduct of this study and the preparation of this report. Mr. F. R. Brown was Technical Director.

CONTENTS

CONTENTS

CONVERSION FACTORS, BRITISH TO METRIC UNITS OF MEASUREMENT

British units of measurement used in this report can be converted to metric units as follows:

Multiply	by	To Obtain
mils	0.00254	centimeters
inches	2.54	centimeters
feet	0.3048	meters
miles (U. S. statute)	1.609344	kilometers
square feet	0.092903	square meters
tons (2000 lb)	907.185	kilograms
pounds (mass) per square foot	4.882429	kilograms per square meter
pounds (mass) per cubic foot	16.0185	kilograms per cubic meter
tons (force) per square foot	95.7606	kilonewtons per square meter
Fahrenheit degrees	5/9	Celsius or Kelvin degrees*

* To obtain Celsius (C) temperature readings from Fahrenheit (F) readings, use the following formula: $C = (5/9)(F - 32)$. To obtain Kelvin (K) readings, use: $K = (5/9)(F - 32) + 273.15$.

SUMMARY

Differential swelling and shrinkage of foundation soils are responsible for considerable damages to buildings and other structures in many parts of the world. One of these regions is in Jackson, Mississippi, and the surrounding area, where many types of structures have been damaged from movements of the underlying Yazoo clay formation.

Field test sections, each containing an instrumented 100-ft-square area covered with an impermeable material simulating a lightweight structure, have been planned for five regions. The first test section was constructed near Jackson in October 1969 in an area underlain by the Yazoo clay formation. Results of field and laboratory investigations conducted prior to construction were used to estimate the amount of heave anticipated in the test area.

The climate at Jackson is warm and humid. The test section was constructed on a moist soil profile. Negative pore water pressures of about 1 ton/sq ft have been measured in the laboratory in undisturbed samples of Yazoo clay. Accumulative heave of less than 0.04 ft measured during 1-1/4 years of observations shows a pattern of very slow change that may require years before the maximum heave is developed.

PROPERTIES OF EXPANSIVE CLAY SOILS

JACKSON FIELD TEST SECTION STUDY

PART I: INTRODUCTION

Background

1. In many parts of the world, considerable damage to small and large buildings, such as houses, offices, hospitals, and special purpose buildings, has been caused by differential swelling and shrinkage of foundation soils. The economic loss resulting from damages to foundations, pavements, on-grade floor slabs, retaining walls, canal and reservoir linings, and other construction probably can never be fully estimated. Although the phenomenon of swelling soils has been studied for many years, the behavior of expansive soils cannot be predicted adequately. Improved foundation design and construction procedures need to be developed to effectively control the soil behavior or to provide adequate means for a structure to tolerate the predicted movements.

2. Expansive clays often heave because transpiration of moisture by vegetation and evaporation is inhibited under a structure, allowing soil moisture to accumulate from rainfall, artificial watering, and capillary rise from the water table.[1-4] The amount of heave beneath a structure is a function of the climatic environment, the water table depth, the amount and type of clay minerals, and other factors.[5,6]

3. Structures constructed by the Corps of Engineers have undergone serious distress and have caused operational problems as well as architectural nuisances, such as cracked walls, uneven floors, and plaster falling from cracked ceilings and walls, in medical and other facilities. These are described briefly in a recent survey report by the U. S. Army Engineer Waterways Experiment Station (WES).[7] A project, "Properties of Expansive Clay Soils," sponsored by the Office, Chief of Engineers, Directorate of Military Construction, was organized by

WES to determine suitable criteria for designing foundations for permanent-type structures founded on expansive soils. Reliable criteria must take into account the volume-change characteristics of the foundation soil and, consequently, the prediction of the ultimate in situ heave. The results of this program will be incorporated into a comprehensive design and construction manual for foundations on expansive soils.

4. WES studies include compilation of all available literature on the behavior of swelling clays and heave prediction methods, a field study program to determine in situ heave characteristics of soils beneath pile and slab foundations, laboratory research directed toward the measurement of negative pore water pressure, and an analysis of construction methods for building on swelling soils. A recent literature survey[7] indicated that extensive investigations into all recognized aspects of swelling soils have been conducted in many parts of the world. The field study program will facilitate an evaluation of many factors influencing the in situ behavior of expansive soils through observations of instrumented test sections located in typical expansive clay problem areas in the United States, such as Jackson, Mississippi; San Antonio, Texas; Rapid City, South Dakota; Denver, Colorado; and Gallup, New Mexico.[8] Laboratory studies have resulted in a simple and rapid technique for measuring suction pressures by thermocouple psychrometers. Observations and analyses of selected structures are also being performed to verify design and construction concepts developed from laboratory and field investigations and from comparative analyses of foundation systems.

Purpose and Scope

5. The first field section was constructed at the former Clinton installation of the WES. The test section (herein referred to as the Jackson test section) is located on the very expansive, slickensided Yazoo clay formation near Jackson, Mississippi. The purpose of this report is to review progress of the Jackson test section study and to

lay groundwork for future research in this program. The report includes a description of the test area, laboratory analyses of the test site soil, field observations of the site instruments from October 1969 through December 1970, and an analysis of results. The appendices include details of the laboratory swell tests on samples from the Jackson test section and descriptions of the test section instrumentation.

PART II: DESCRIPTION OF THE JACKSON TEST AREA

Heave Behavior in the Jackson Area

6. Many cases of structural damage have been observed in the vicinity of Jackson that range from slight movements to displacements of as much as 1 ft* in the underlying Yazoo clay formation.[9,10,11] All types of structures seem to be affected, including private homes, buildings, utility lines, streets, highways, and airfields.

7. In the case of one four-story building, the bearing walls were placed on piling and showed no movement.[9] The partition walls on the lowest floor were placed on a slab over a few inches of base course material laid directly on the Yazoo clay. Upheaval of this slab forced the partition walls upward causing considerable damage to the interior walls, floors, and ceilings, up to the top floor. The former WES Concrete Division building at the Clinton installation is founded on piles with grade beams laid on the soil. Whether movement has occurred in the piling is not clear; but large cracks on the order of 1 in. in width have appeared at several locations in the exterior walls, and the interior floor slabs show signs of considerable heave. Other buildings in the area with conventional foundations and no piles also have experienced cracked exterior walls and uplifted floor slabs.

8. After only a few years of service, highways and pavements in Mississippi have been plagued with serious distortions from accumulated heave. Observations of highways have indicated that roadway distortion is more severe within cuts and grade points than in fill sections. Laboratory tests and actual flooding of a research highway section have shown swells of about 1 ft in a cut portion.[11] The east runway of the Allen C. Thompson Field (formerly Jackson Municipal Airport) has accumulated heaves of up to 6 and 7 in. after ten or more years of service.[12]

---

* A table of factors for converting British units of measurement to metric units is presented on page ix.

9. Differential movement often occurs where a subgrade has been trenched for utility connections and the trench walls allowed to dry, or where dry backfill has been placed around a structure.[9] A tipsy sidewalk in the front of one home appeared to have originated from heave over a trench that had been cut along the sidewalk for connection of utility lines to the house. Heave of 5 in. was observed in the in situ Yazoo clay adjacent to a backfill that had been placed against a bridge abutment.[9] The face of this exposed Yazoo clay would have had ample opportunity to dry while the bridge was being constructed and before the backfill and pavement were placed. Often, during the course of past construction, little effort has been made to prevent cut faces or fill materials from losing moisture.[9]

10. Construction practices for buildings in the Jackson area normally include the installation of piles with sufficient clearance under grade beams to allow considerable movement without affecting the beams.[9] Past experience indicates that most moisture changes occur in the upper 8 ft of soil below the surface; hence, piling should extend below 8 ft. The top 6 to 8 ft can be lined with some bond-breaking material, such as building paper or plastic sheeting, to reduce friction force on the piles.[9] The length of piling should be extended sufficiently below 8 ft to provide adequate bearing capacity.

Soil Conditions

11. The Jackson test area is in a region known as the Jackson Prairie which runs in a generally east-west direction across the State of Mississippi. The predominant soil of this belt is a fat, stiff marine clay of the Jackson group, called Yazoo clay because of its outcropping along the Yazoo River basin.[13] The Yazoo clay formation was deposited in glacial times with a thickness of about 400 ft in the Jackson area. In later periods, a lean clay loessial material, ranging in thicknesses from 0 to 12 ft, covered the Yazoo clay.[9,14]

12. The upper 10 to 15 ft of the Yazoo clay weathered while it was exposed during its early history to a yellowish or greenish-yellow

color, frequently stained by limonite and manganese along joints. Shrinkage cracks that had developed in the weathered clay closed during later periods when the overburden was placed but remained as joints or slickensides.[9,13] Gypsum crystals in the selenite form are common at outcrops and are found at depths up to 40 ft. The gypsum probably forms by effects of the decomposition of pyrite on fossils and lime in the clay. At greater depths, the Yazoo clay is unweathered and not jointed. It is fairly homogeneous and consists of blue-green to blue-gray calcareous, fossiliferous clay with some pyrite.[13] Atterberg limits of samples of Yazoo clay indicate liquid limits from 50 to 120 and plasticity indices from 30 to 80.[9,15] Swell tests of the constant-volume type described in Appendix A indicated soil swell pressures from 0.8 to 1.8 tons/sq ft.[15] When wetted, air-dried Yazoo clay slakes quickly, while the structure of the material previously kept at natural water content is affected very little by the addition of water.[9]

13. The mineralogical composition of a minus 2 micron fraction of an unweathered Yazoo clay sample, taken about 1/2 mile from the test site at an elevation of 300 ft above mean sea level, is given in table 1.[16] On the basis of this analysis, the montmorillonite content, the component heavily responsible for the swelling in clay soils, is on the order of 30 percent of the minus 2 micron fraction. The chemical analysis of a specimen from a boring sample in this type of soil located 24 miles north of the test site is also given in table 1. The soil down to 26 ft of depth is leached[10] and does not contain appreciable quantities of calcium and sodium, although gypsum crystals are found in the weathered clay. The calcium content below 26 ft is 5.7 to 7.5 percent with minor amounts of sodium, suggesting that the expansive clay is a calcium montmorillonite.

Description of the Test Site

14. The testing area is located near the town of Clinton, several miles west of Jackson, on the crest of a rolling hill at an elevation of 328 ft with drainage sufficient to avoid ponding. Rainfall near

and on the covered section flows to the northwest corner by way of shallow drainage ditches adjacent to the section perimeter. A gravel road with drainage ditches circles around the southern and eastern sides of the section. The road comes within 34 ft of the southeast corner of the test area but is several feet lower in elevation. The climate of the area is warm and humid with about 50 in. of rainfall and open-pan evaporation annually. A schematic diagram and photo of the instrumented and covered test section are shown in figs. 1 and 2, respectively. Instrumentation includes a permanent bench mark, piezometers, surface and deep heave plugs, soil suction thermocouple psychrometers, soil temperature thermocouples, and a weather station. Water contents were determined by nuclear moisture probes passed down aluminum access tubes. A temperature thermocouple was located with each of the thermocouple psychrometers. The weather station was located about 125 ft southeast of the test section center as viewed in fig. 2. Details of these instruments are given in Appendix B. An impermeable cover was placed on a graded level surface which had been stripped of 0 to 6 in. of vegetation on 6 October 1969 near the end of the dry season. The cover consisted of two 100-ft-square impermeable membranes separated by a layer of moist concrete sand as shown in fig. 1. Slits made in the top cover for instruments were sealed with weather-resistant gray fabric tape. Periodic maintenance was required to reseal joints in the cover. By 31 December 1970, the top cover showed deterioration in the form of cracking, embrittlement, and scaling of the vinyl layers to the extent that replacement was necessary. Also, the gray tape was found to be ineffective as a permanent seal material. The top cover was replaced on 19 January 1971 with a T16 neoprene membrane that adequately covered the entire section and eliminated these maintenance problems.

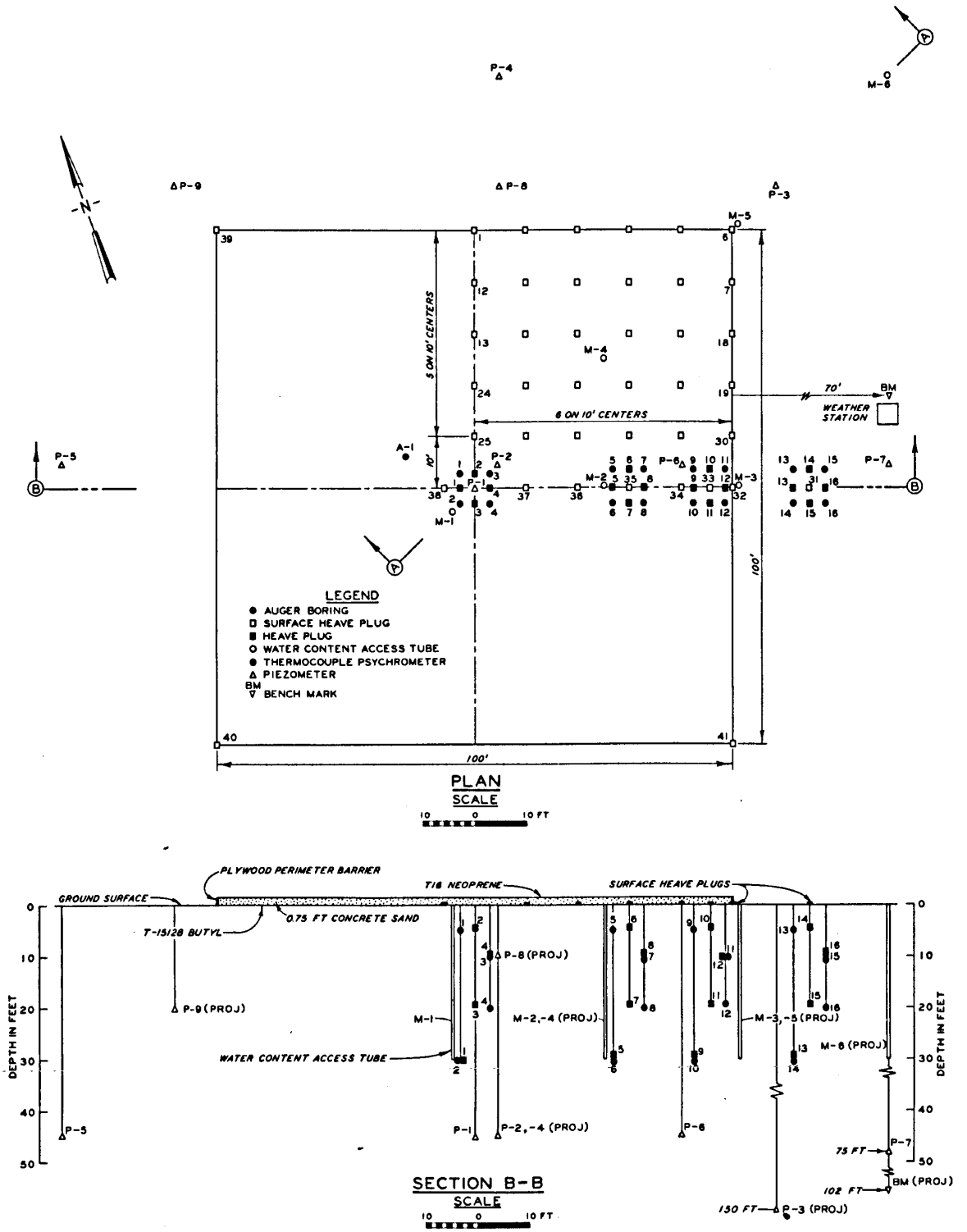

Fig. 1 Layout of Jackson test section

Fig. 2. View of Jackson test section

PART III: LABORATORY ANALYSES

Soil Classification

15. Visual classifications of the soil from each boring on sections A-A and B-B of fig. 1 are shown in fig. 3. Sample borings P-5, A-1, PU-6, and PU-7 are projected onto section B-B for convenience. The notations PU-2, PU-3, PU-6, and PU-7 in fig. 3 refer to undisturbed sample borings located at P-2, P-3, P-6, and P-7, respectively, in fig. 1. Interpretations made from these borings and test data presented in table 2 indicate that the surface soil to a 4-ft depth is a fat, brown clay (CH). From 4 to 8 ft, the soil is a lean clay (CL) mixture of tan and brown components. Below the 8-ft depth, the soil is fat, tan and gray (or yellowish or greenish-yellow), slickensided clay (CH) referred to as weathered Yazoo clay of the Jackson group. At about a 26-ft depth, the clay becomes blue-gray, indicative of the unweathered condition. Gypsum is also found below 20-ft depths in the undisturbed boring samples.

16. A generalized soil profile based on the above data is given in fig. 4 with the specific gravity, Atterberg and shrinkage limits, and natural water content w_n of the soil. The surface stratum down to 8 ft is a loess soil, while the remaining soil profile is Yazoo clay. The specific gravity of these soils ranges from 2.68 to 2.75. The Atterberg limits plotted in the plasticity chart in fig. 5 show that the data fit into a fairly narrow band above the A-line and below the U-line. Gradation results for samples from boring PU-2 are shown in fig. 6. About 20 percent of the soil from 2-1/2- and 5-ft depths is finer than 2 microns, while 70 percent of the tan and gray clay from 10- and 20-ft depths is finer than 2 microns. The natural water content of the soil is near the plastic limit to a depth of about 4 ft but becomes higher than the plastic limit at greater depths, as shown in fig. 4. The ratio of the natural water content to the plastic limit and the liquidity index are given in fig. 7 and table 3. The liquidity index I_L is a comparison of the natural water content with the

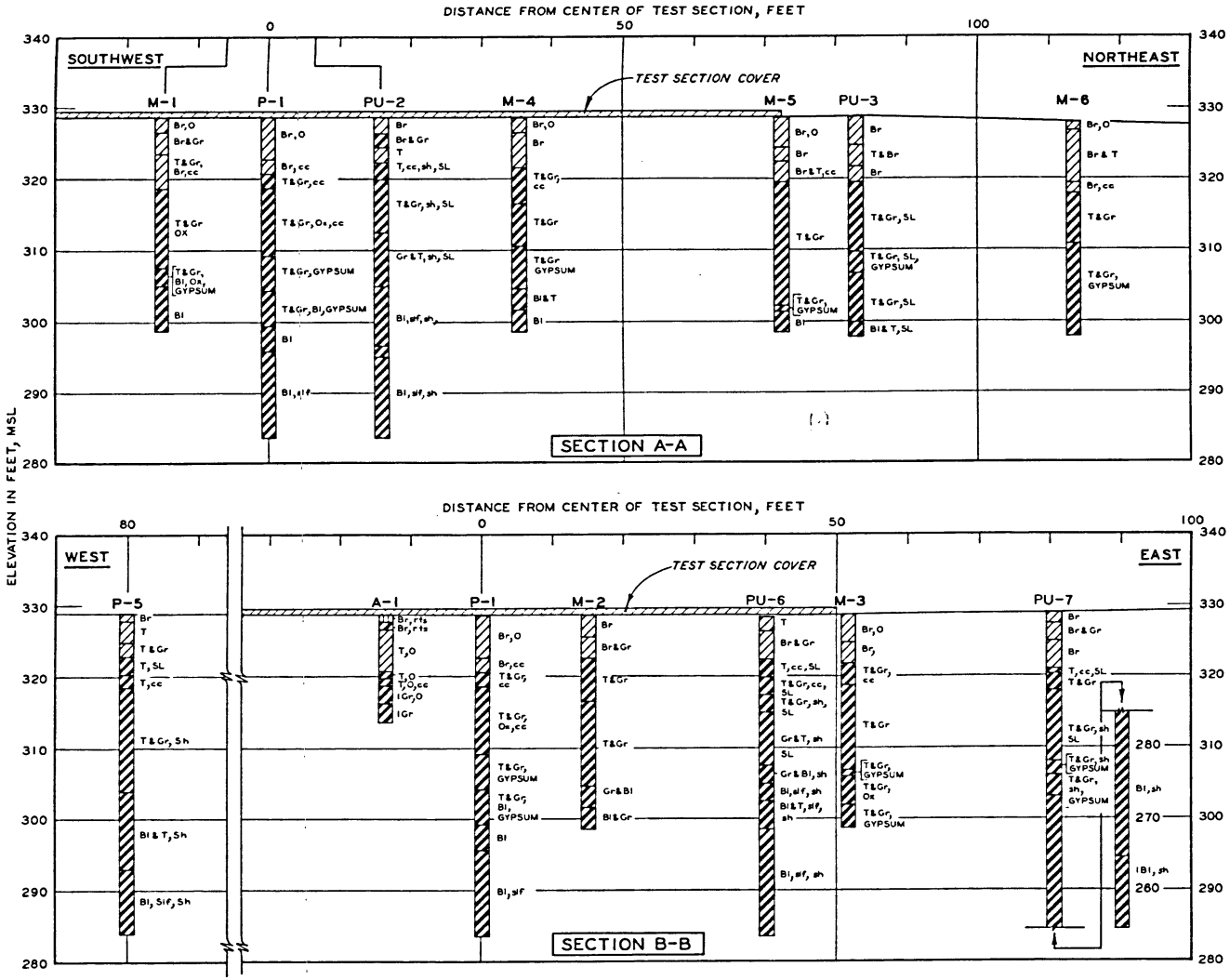

LEGEND

- LEAN CLAY (CL)
- FAT CLAY (CH)
- SILT (ML)

T	TAN
Gr	GRAY
lGr	LIGHT GRAY
Br	BROWN
Bl	BLUE
cc	CONCRETIONS
rt	ROOTLETS
sh	SHALEY
slf	SHELL FRAGMENTS
O	ORGANIC MATTER
Ox	OXIDIZED
SL	SLICKENSIDES

BORING	TYPE	DATE
A-1	8" HAND AUGER	OCT 68
M-1 TO M-5	2" AUGER	OCT 68
M-6	2" AUGER	OCT 69
P-1, P-5	5½" AUGER	DEC 68
PU-2,-6,-7	5½" UNDISTURBED	DEC 68
PU-3	5" UNDISTURBED	OCT 69

NOTE: PU-2, PU-3, PU-6, AND PU-7 ARE UNDISTURBED SAMPLE BORINGS MADE AT PIEZOMETER LOCATIONS P-2, P-3, P-6, AND P-7, RESPECTIVELY.

Fig. 3. Boring log of Jackson test section soil

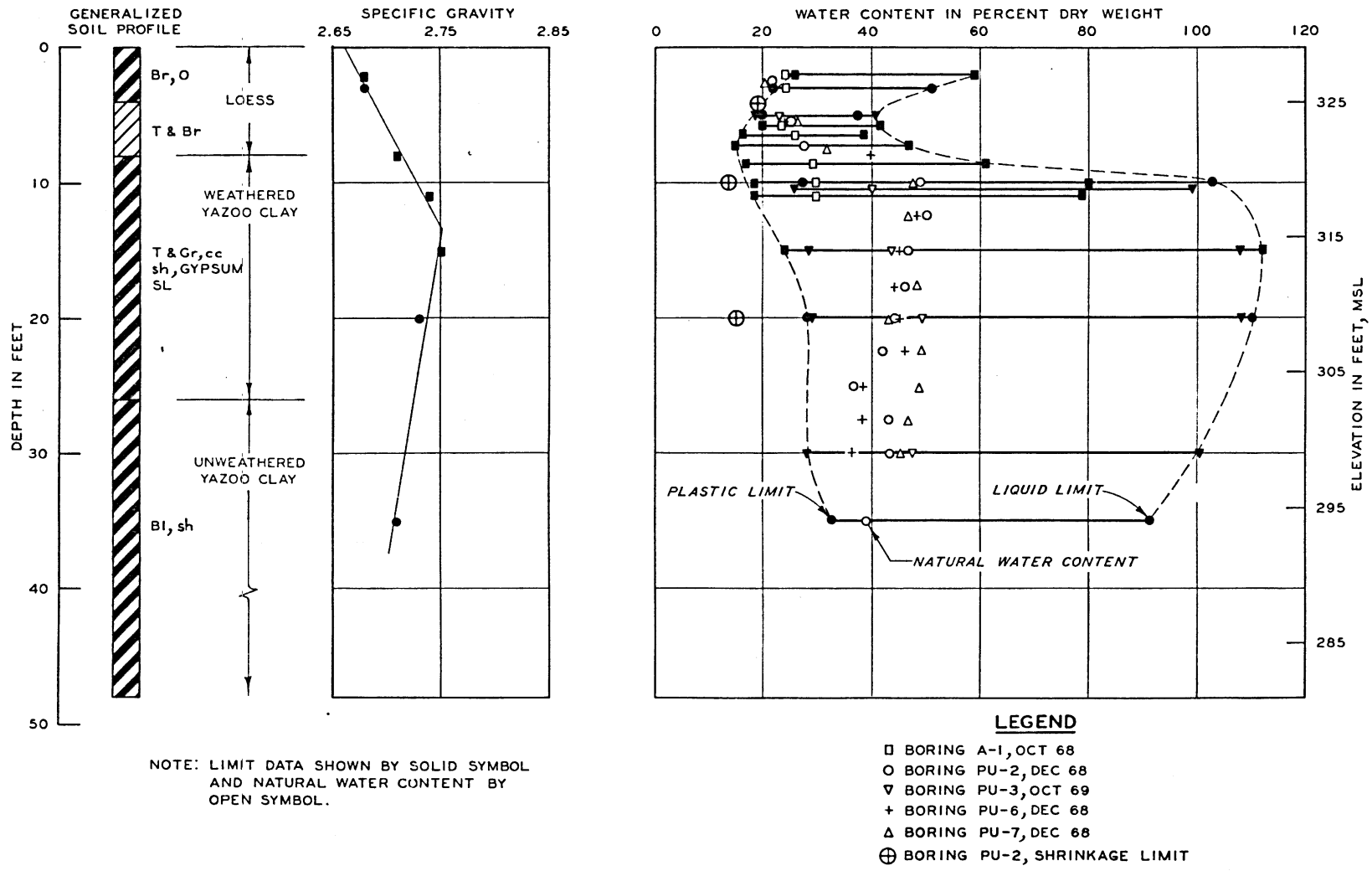

NOTE: LIMIT DATA SHOWN BY SOLID SYMBOL AND NATURAL WATER CONTENT BY OPEN SYMBOL.

Fig. 4. Generalized soil profile, specific gravity, Atterberg limits, and natural water content of Jackson test section soil

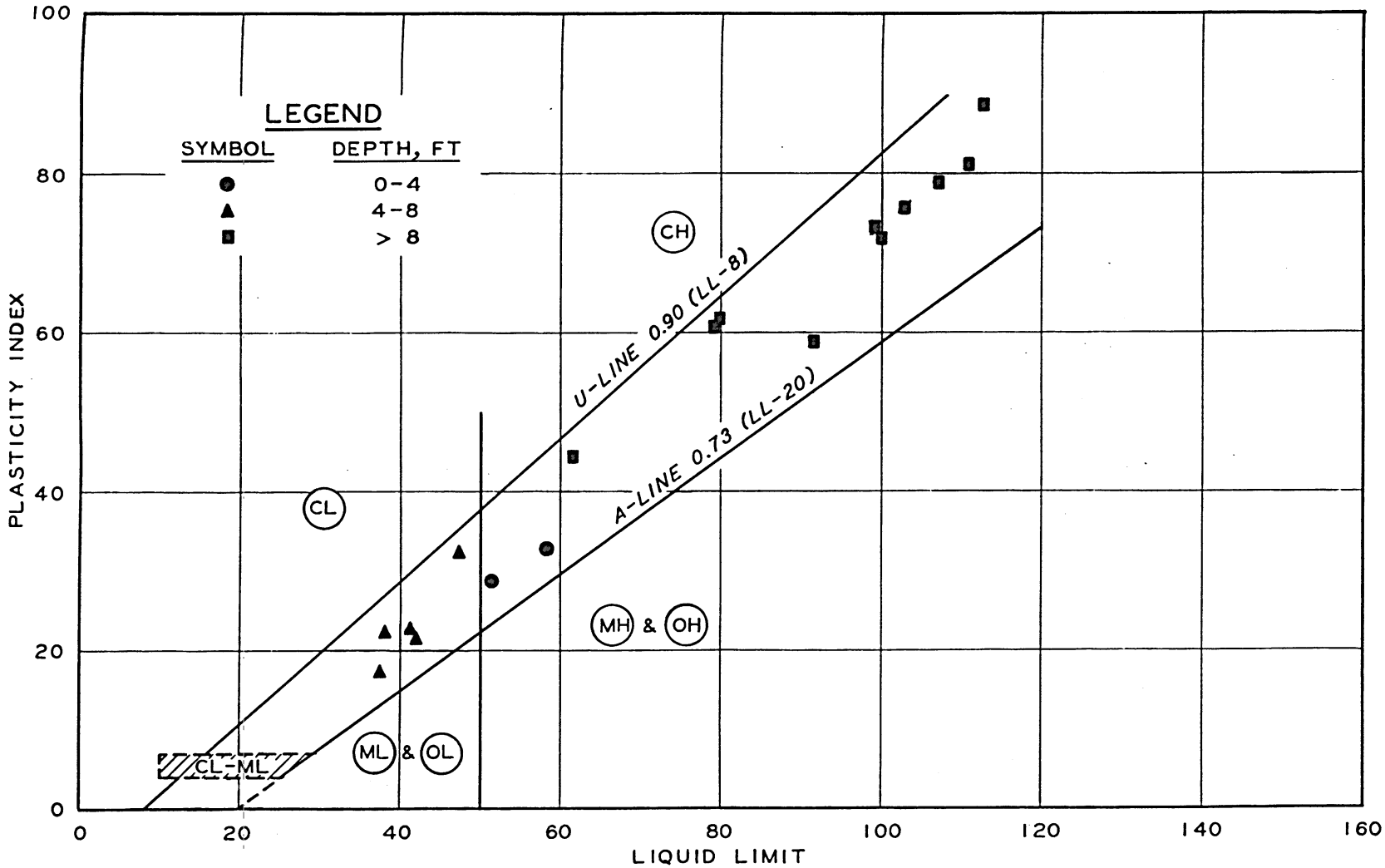

Fig. 5. Plasticity chart of Jackson test section soil

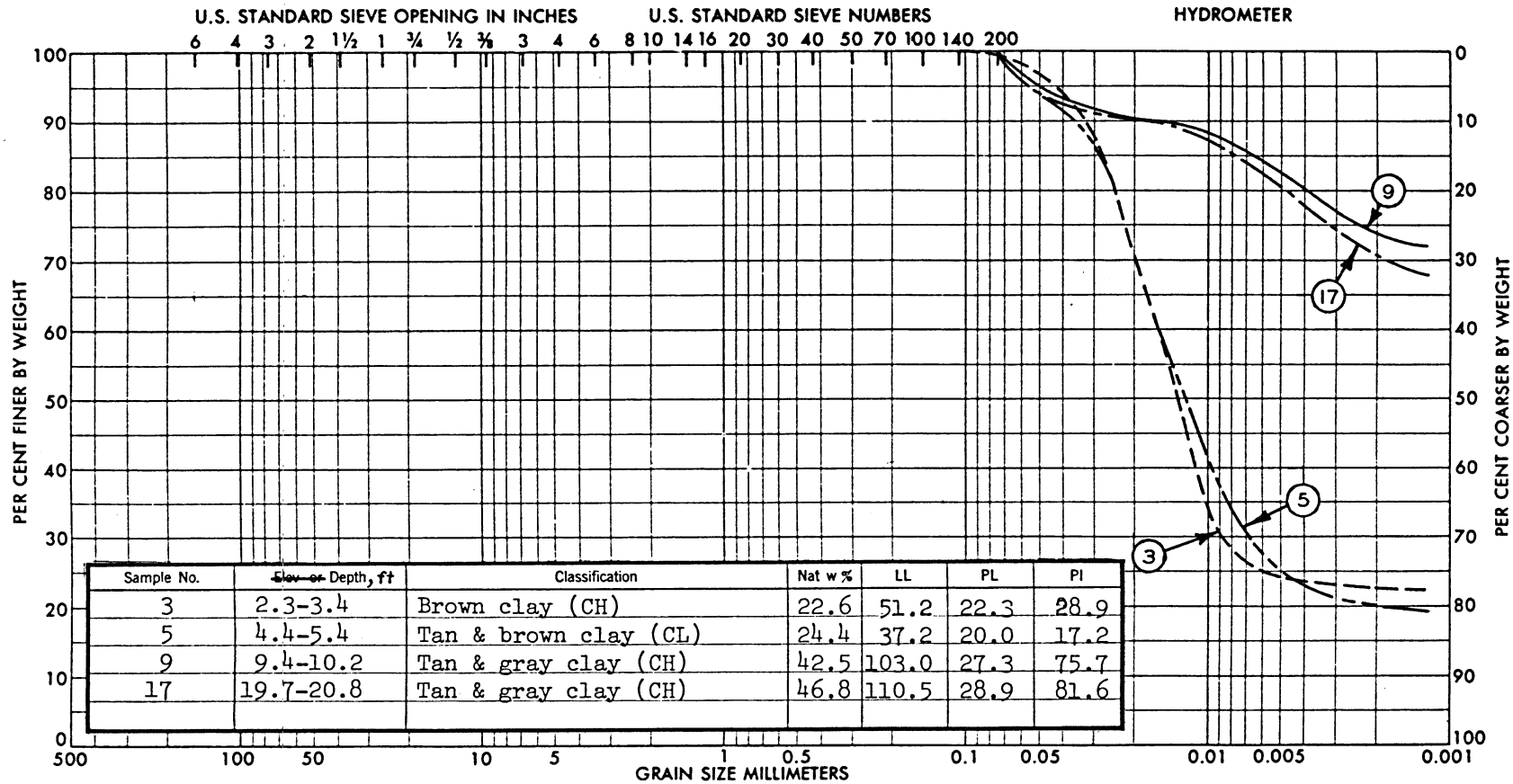

Sample No.	~~Elev or~~ Depth, ft	Classification	Nat w %	LL	PL	PI
3	2.3-3.4	Brown clay (CH)	22.6	51.2	22.3	28.9
5	4.4-5.4	Tan & brown clay (CL)	24.4	37.2	20.0	17.2
9	9.4-10.2	Tan & gray clay (CH)	42.5	103.0	27.3	75.7
17	19.7-20.8	Tan & gray clay (CH)	46.8	110.5	28.9	81.6

Fig. 6. Gradation curves of samples from boring PU-2

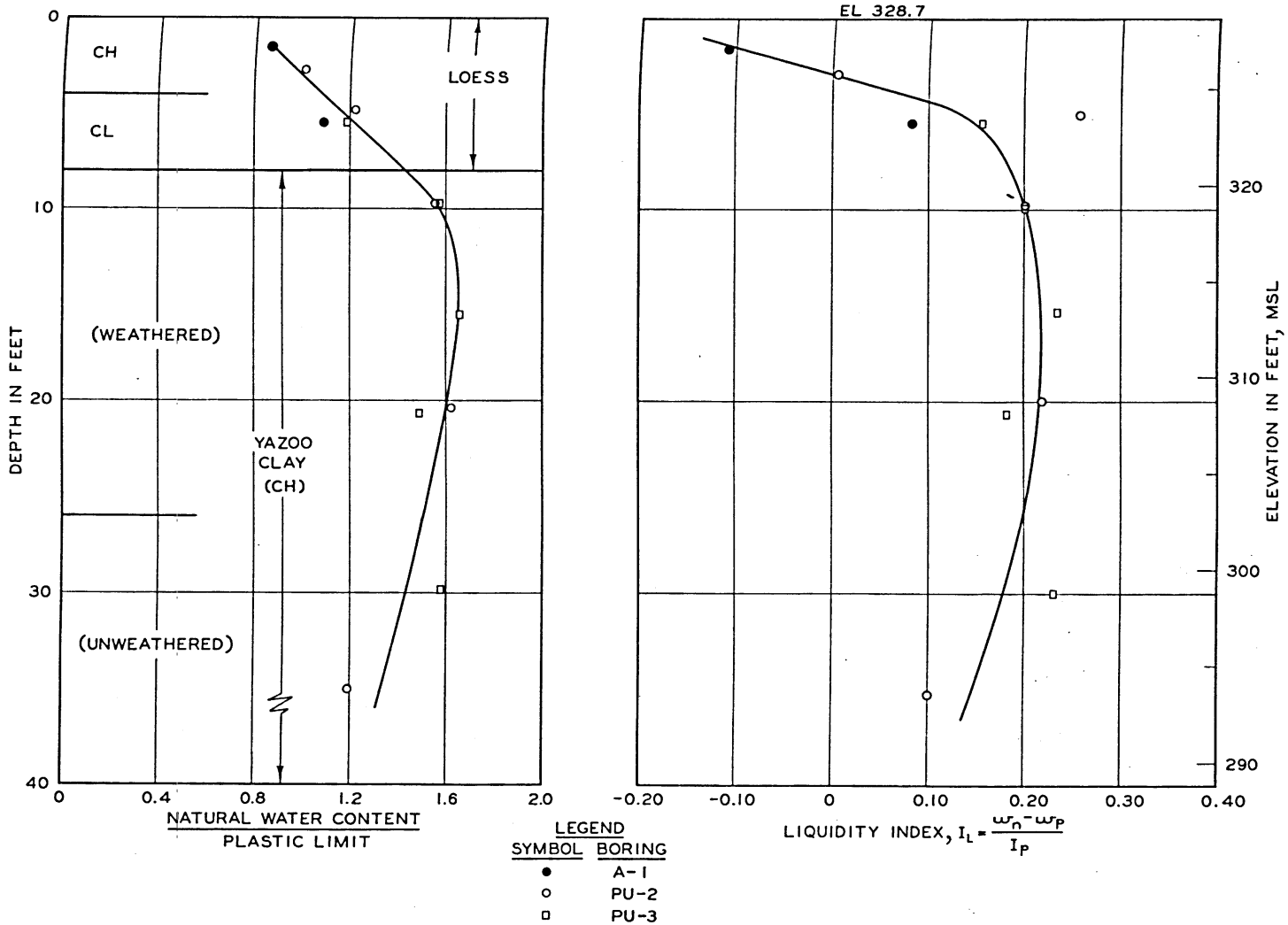

Fig. 7. Relationships of natural water content to Atterberg limits

plastic limit, and it is defined by[17]

$$I_L = \frac{w_n - w_p}{I_p} \tag{1}$$

where

w_n = natural water content
w_p = plastic limit
I_p = plasticity index

A liquidity index near zero shows that the natural water content is near the plastic limit. The activity A was originally defined by Skempton[18] but later modified by Seed, et al.[19] to

$$A = \frac{I_p}{C - N} \tag{2}$$

where

C = percent of clay size less than 2 microns
N = constant

The constant N was introduced to adjust for differences in operating characteristics of the British and American liquid limit devices, and it appears to be about 5 for natural soils in the United States. The activities in table 2 were computed from equation 2 with N equal to 5. Soils with higher activities for a constant percent of clay sizes finer than 2 microns have greater swelling ability.

Swell

17. Swell characteristics of the soil at the Jackson test site were investigated by swell pressure, swell (overburden),[20] constant-volume swell,[21] and double oedometer[22] tests on undisturbed samples. Test procedures are described in Appendix A.

Swell pressure

18. Swell pressure tests were performed for estimating the initial negative pore water pressure distribution within the soil. Test

results on samples from boring PU-2 taken in November 1968 are shown in table 4 and indicate pressures up to 1.8 tons/sq ft. Fredlund[23] found that this type of swell pressure test underestimated the actual swell pressures in the soil, because small increases in volume produce pronounced decreases in the measured swell pressure. Although the dial gage reading of the consolidometer can be maintained constant while the specimen is given free access to water, volume change is occurring in the specimen as it seats against the porous stones and compresses the components of the consolidation assembly.

Swell (overburden)

19. The swell of samples under the in situ soil overburden loads from boring PU-2 (see table 4) was determined without the cover weight. Later tests were performed on samples from boring PU-3 taken October 1969 just before the cover was placed on the section. The overburden loads were applied in two increments: one equal to the soil weight, and an additional increment of 0.06 tons/sq ft to simulate the weight of sand in the section cover. The measured swells for boring PU-3 given in table 5 average about 1 percent, and the values are generally greater than those from boring PU-2. Laboratory tests on PU-2 were performed by the Soils and Pavements Laboratory at the WES, while tests on PU-3 were performed by the Southwestern Division Laboratory at Fort Worth, Texas. Differences in equipment, experimental error, and sample location may account for the differences in results between boring samples PU-2 and PU-3. Reasons for these differences are not apparent from the comparison of Atterberg limits and water contents listed in table 3.

Constant-volume swell

20. The constant-volume swell method described by Sullivan and McClelland[21] is founded on the principle of effective stress. The test results are useful for determining in situ negative pore water pressure, as well as swell properties.[23,24] This test may underestimate the suction in partly saturated soils because the fraction of applied pressure effective in changing the pore water pressure may be less than one. In other words, the total influence of the suction pressure

cannot be mobilized against the external pressure unless the pressure is a gas. Observations have shown that for a relatively dry clay, the swell pressure may be about one/tenth of the suction.[25,26] Data on samples from boring PU-3 shown in table 5 and fig. 8 indicate that swell pressures P_s of from 1.1 to 2.8 tons/sq ft existed in the soil during October 1969. The difference between P_s and the overburden pressure P_o is the suction or negative pore water pressure for saturated soils. The degree of saturation data (S values) in table 5 show that these soils are essentially saturated.

Double oedometer

21. The basis of the double oedometer test procedure described by Jennings and Knight[22] is the principle of effective stress. The results of the double oedometer tests on undisturbed samples of the PU-2 boring are given in table 6 and fig. 9. The curves of consolidation from natural water content were adjusted to coincide with the corresponding high-pressure portions of the curves of consolidation after swell at seating load, as shown in the figure. Jennings[27] has observed that such an adjustment sometimes can lead to a gross overprediction of heave. Although certain soils tend to heave under lower applied pressures, they may collapse under higher pressures, which is a phenomenon that does not obey the effective stress principle.

22. Falling head permeability tests were performed on the specimens used in determining the consolidation after swell at the seating load for surcharge loads of 2, 4, 8, and 16 tons/sq ft. These results are plotted in fig. 10. Estimates of the in situ saturated permeability of the soil as a function of depth, found from this figure by determining the void ratio of the soil at its overburden load from fig. 9, are given in table 7. In some instances, the straight-line relationship had to be extrapolated in fig. 10 to consider the in situ saturated void ratio of the soil for the particular overburden load.

Suction Pressure

23. Total suction pressure measurements were made with experimental thermocouple psychrometers designed and developed as part of this

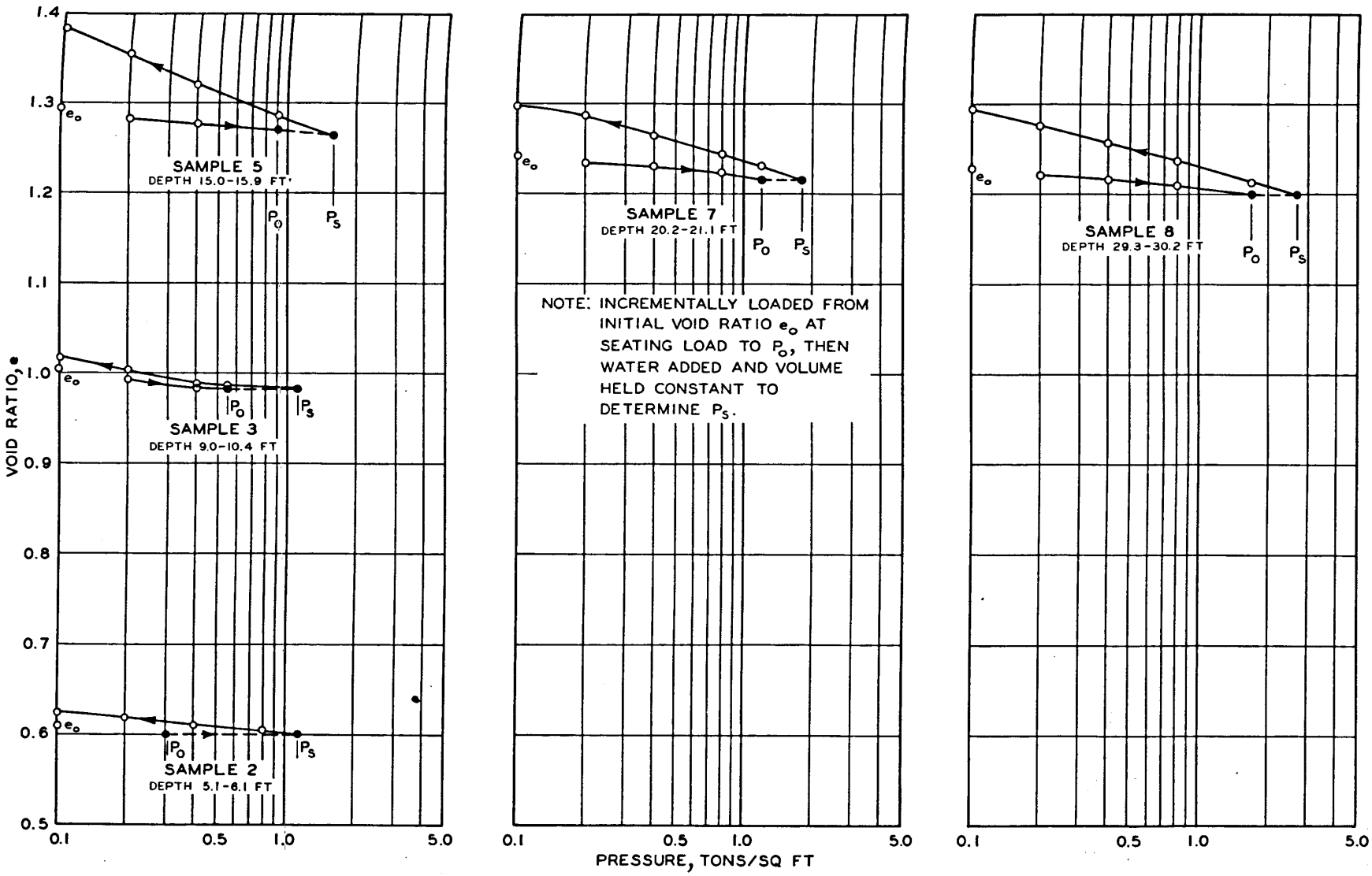

Fig. 8. Constant-volume swell test results from boring PU-3

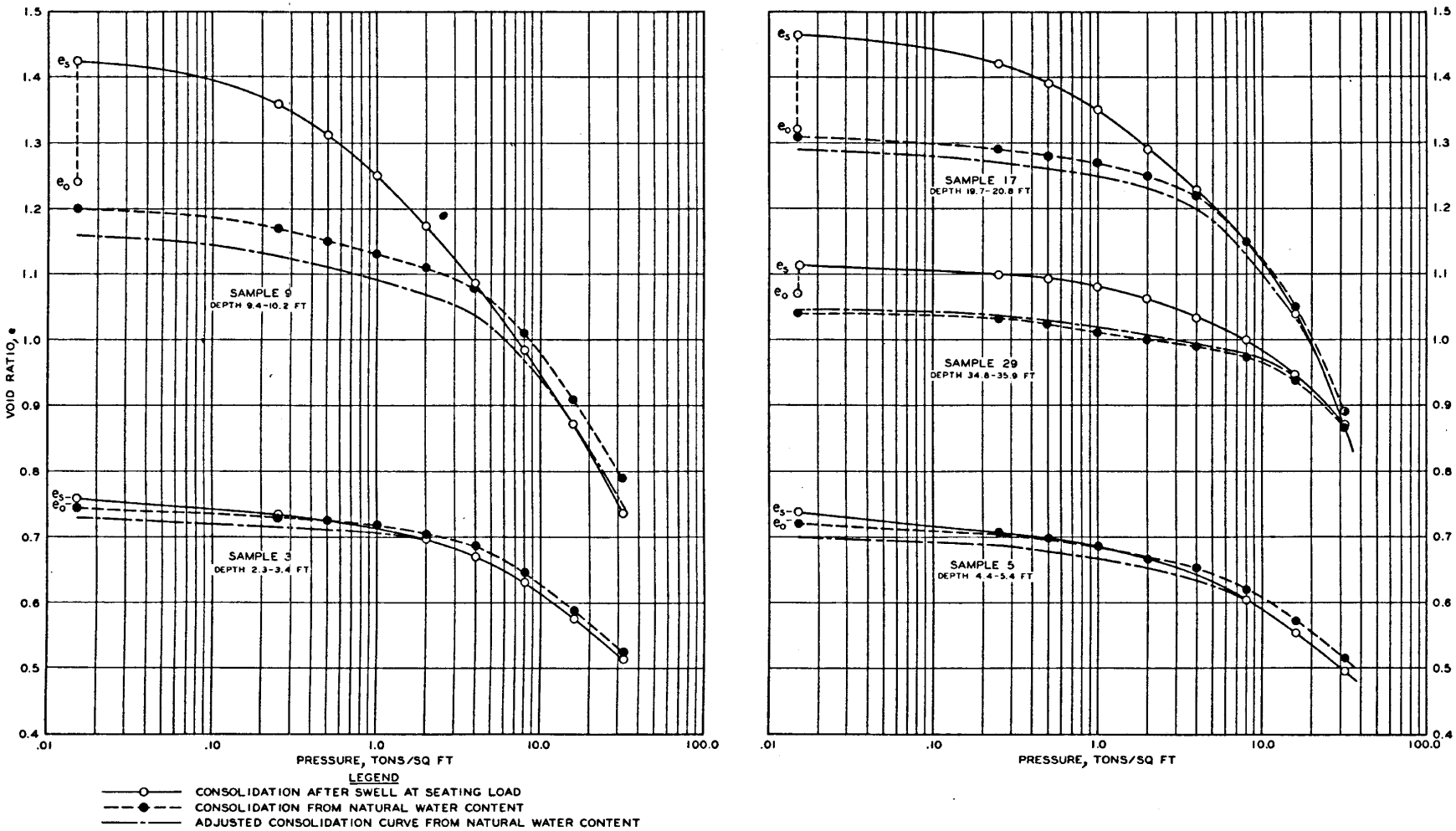

Fig. 9. Consolidation curves from double oedometer tests of samples from boring PU-2

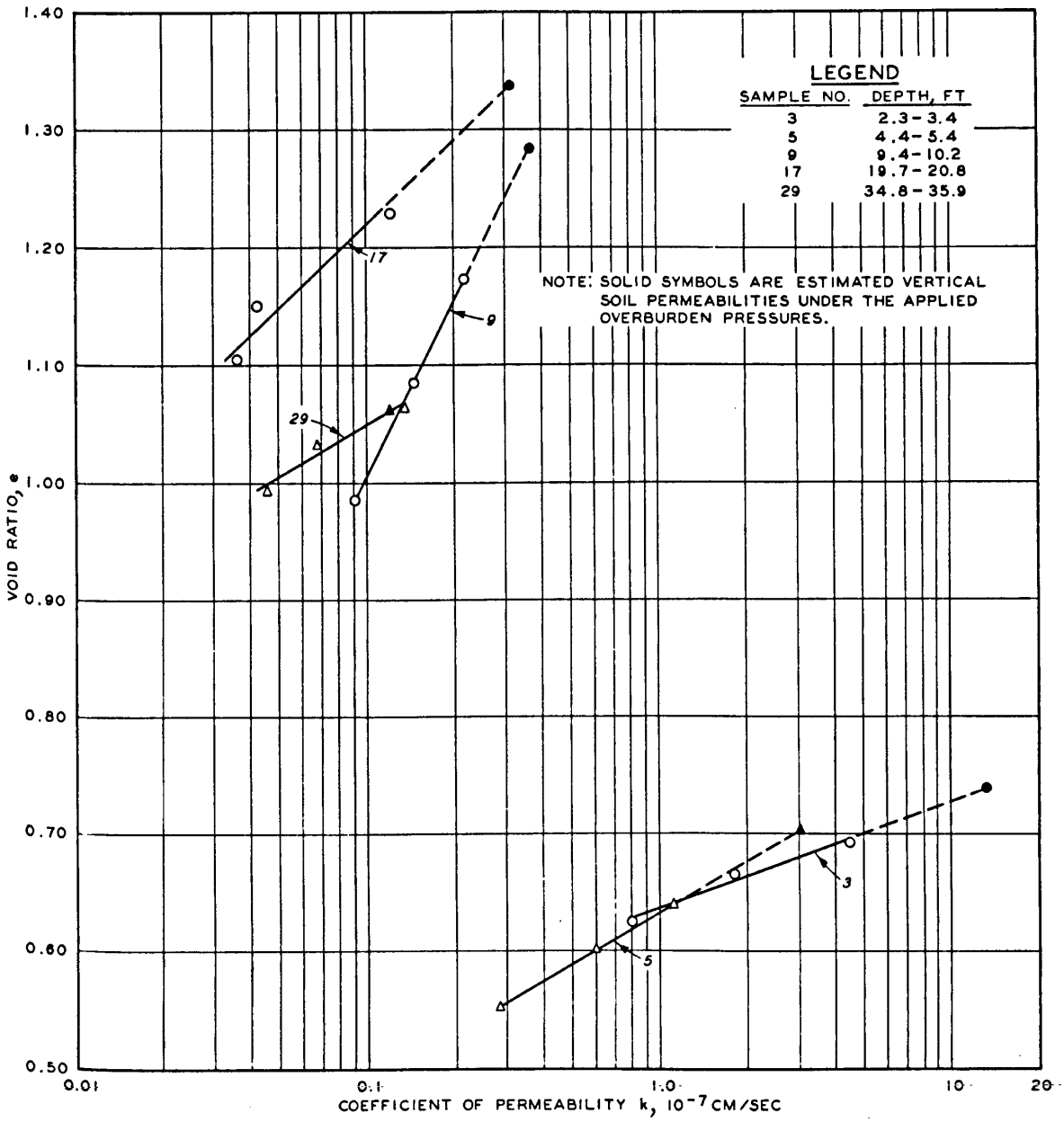

Fig. 10. Laboratory permeabilities of boring samples PU-2 from different depths

project to measure negative pore water pressure in swelling soils. The description and characteristics of these test psychrometers are given in Appendix A. Background information concerning the theory and application of thermocouple psychrometers for the measurement of total soil suction can be found in references 6, 28, 29, and 30. Total suction includes both matrix and osmotic contributions. Laboratory tests were made on specimens without overburden loads.

24. Laboratory suction pressures of disturbed soil samples taken in December 1968 are given in table 8. These measurements are on the order of 1 to 3 tons/sq ft of total suction pressure at natural water contents. Total suction measurements were also performed on irregularly shaped 1-in.-diam pieces of undisturbed samples from boring PU-6 taken in November 1968. These specimens were air-dried for various periods of time to determine the suction versus water content relationship of the clay on drying. The results given in table 9 and plotted in fig. 11 show a generally steep gradient of suction change with small changes in water content. The suction pressure at natural water content is small, on the order of 1 or 2 tons/sq ft. This determination is confirmed by the suction measurements on soil from the jar samples. The close agreement of these data with swell pressure results strongly indicates a leached soil with very little osmotic component of suction.

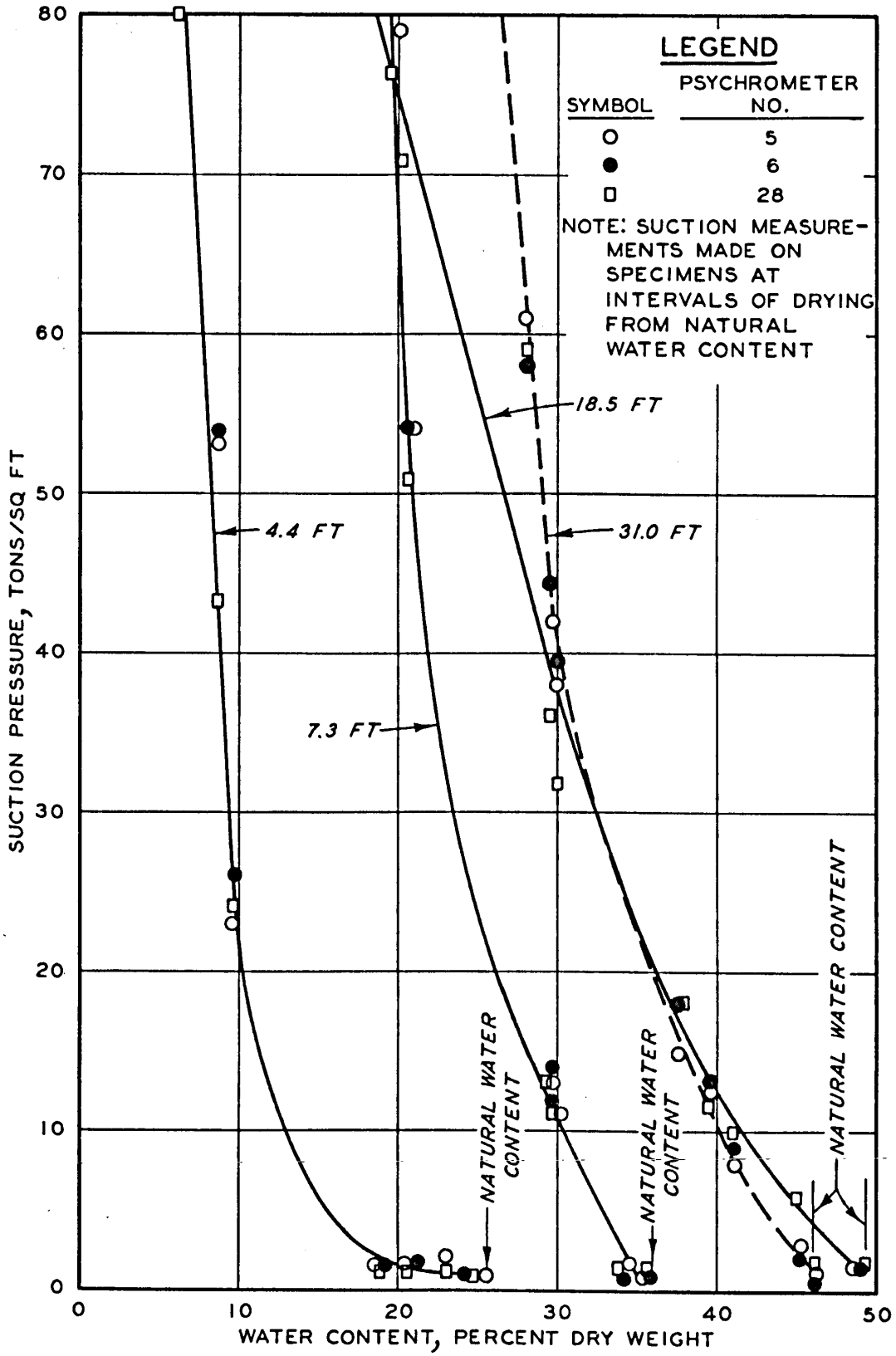

Fig. 11. Suction pressure measured by thermocouple psychrometers on samples from boring PU-6

PART IV: FIELD OBSERVATIONS OF INSTRUMENTS

Introduction

25. The instruments were monitored regularly after 23 September 1969, two weeks prior to the placement of the section cover. The cover simulated a lightly loaded structure that inhibits evaporation of moisture, thereby promoting heave beneath the covered area. Field observations had occasionally been made earlier to check the instruments and to determine initial soil characteristics. Preliminary readings indicated that the field psychrometers would not yield useful quantitative data because of low in situ negative pore water pressure. Data were regularly recorded from the meteorological instruments, piezometers, soil temperature thermocouples, nuclear probe moisture gages, and heave plugs.

Meteorological Instruments

26. Meteorological readings in fig. 12 include temperature, relative humidity, rainfall, and open pan evaporation data as of October 1969. Official weather data were obtained from stations at Jackson 4NW (temperature), Jackson Airport (relative humidity), and the WES Clinton installation (rainfall).[31]

27. Soil moisture conditions can be evaluated from rainfall and temperature data by Thornthwaite's method.[32,33,34] The overall availability of moisture during the year is given by Thornthwaite's moisture index (MI) by[32,33,34]

$$MI = \frac{100S - 60D}{PE} \tag{3}$$

where

S = water surplus, in.

D = water deficiency, in.

PE = potential evapotranspiration, in.

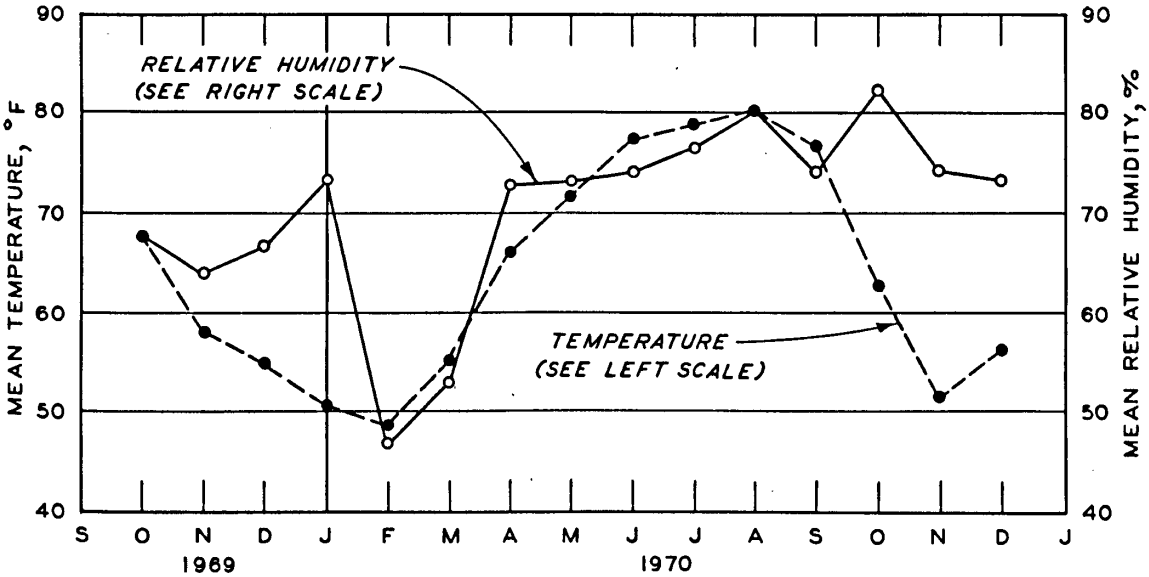

a. MEAN TEMPERATURE AND HUMIDITY DATA

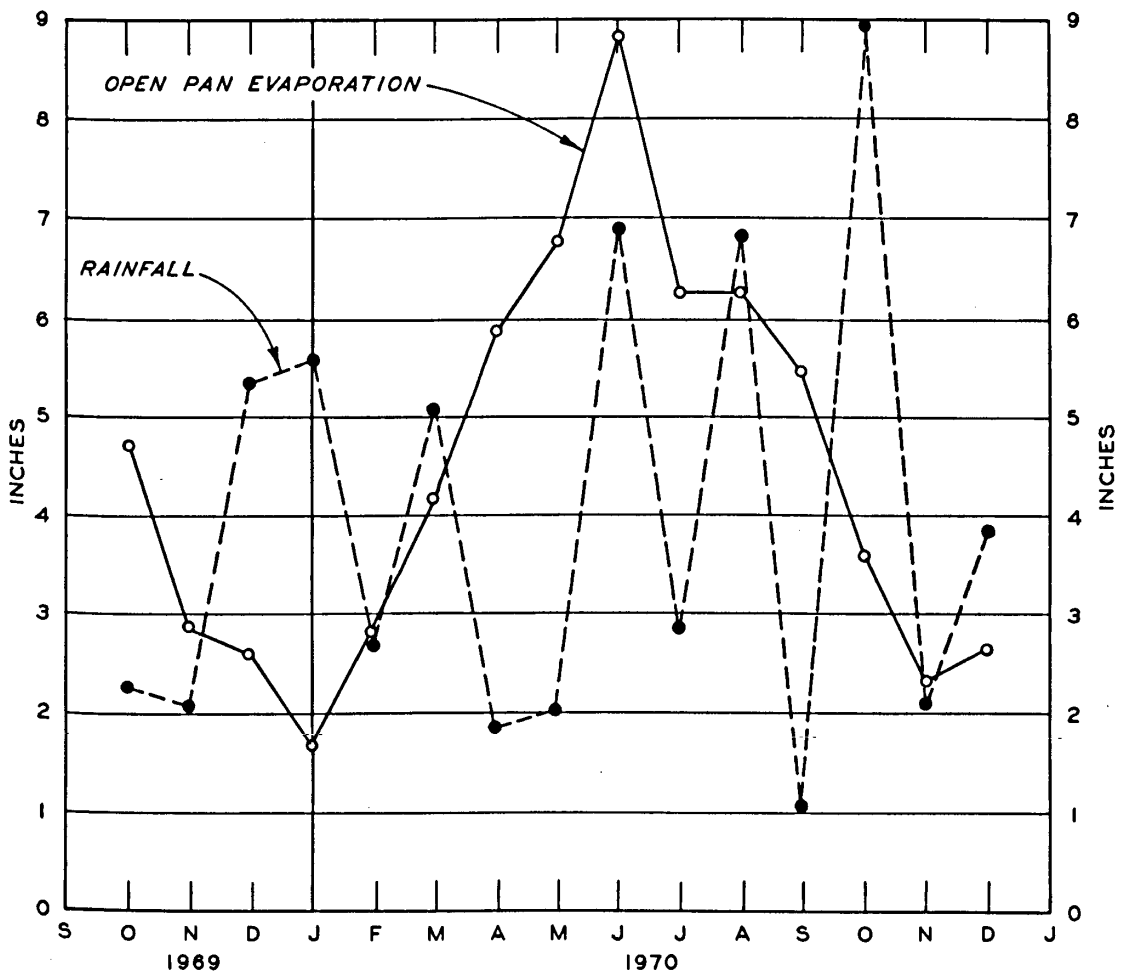

b. AVERAGE RAINFALL AND EVAPORATION DATA

Fig. 12. Monthly meteorological data

Although the moisture index is an empirical relationship between potential evapotranspiration and mean air temperature, it appears to provide a satisfactory measure of soil moisture conditions.[34] The PE is an estimate of the total possible loss of water from a sizeable field by transpiration from vegetation and evaporation from the soil with adequate water reserves. The surplus includes both surface runoff and subsurface drainage. The water deficiency can be found from the amount of water available in the soil given by[33]

$$M = Cf + Rf - PE \tag{4}$$

where

M = amount of available water in the soil, in.
Cf = field water capacity of the soil, in.
Rf = rainfall, in.
PE = potential evapotranspiration, in.

If M is negative, then this amount of water is the water deficiency. The field capacity is the amount of readily available water which the soil can store within the root zone of vegetation at the site. The soil moisture conditions in the Jackson area for the last several years determined by the Thornthwaite method are shown in fig. 13. These determinations were made assuming the soil had 4 in. of water capacity, a normal amount for clays. The water deficiencies shown in this figure indicate that the normal dry season is in the latter part of the summer, ending about October. The large positive MI's show that the climate is very humid, although it was less humid in 1969 than during 1968 or 1970.

Piezometers

28. A water table was not observed in the Casagrande piezometers with tip elevations of 285 (45 ft in depth) and 255 (75 ft in depth) ft. Readings of the 150-ft-deep P-3 piezometer given in fig. 14 showed an

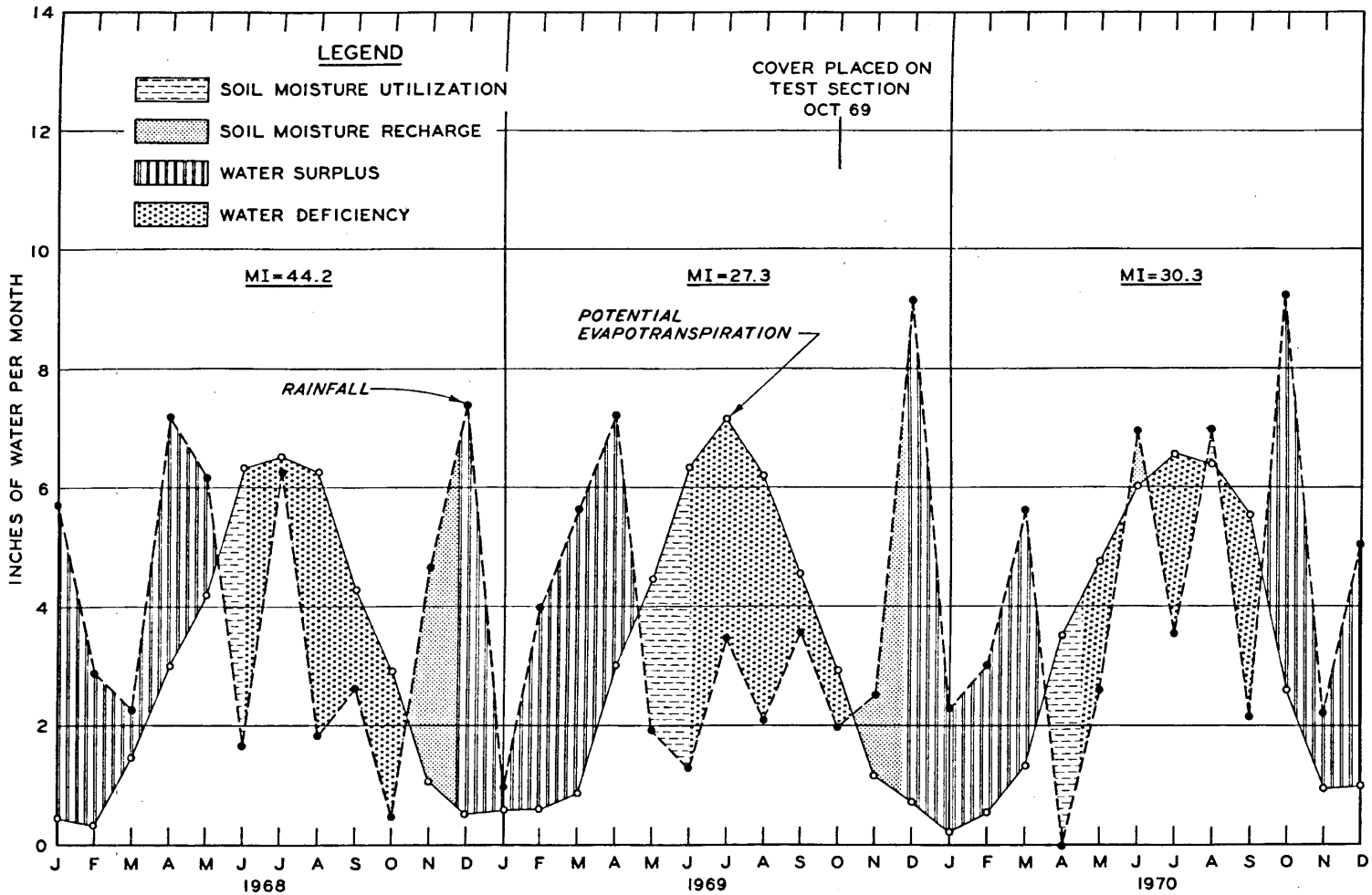

Fig. 13. Comparison of monthly rainfall and potential evapotranspiration with soil moisture conditions

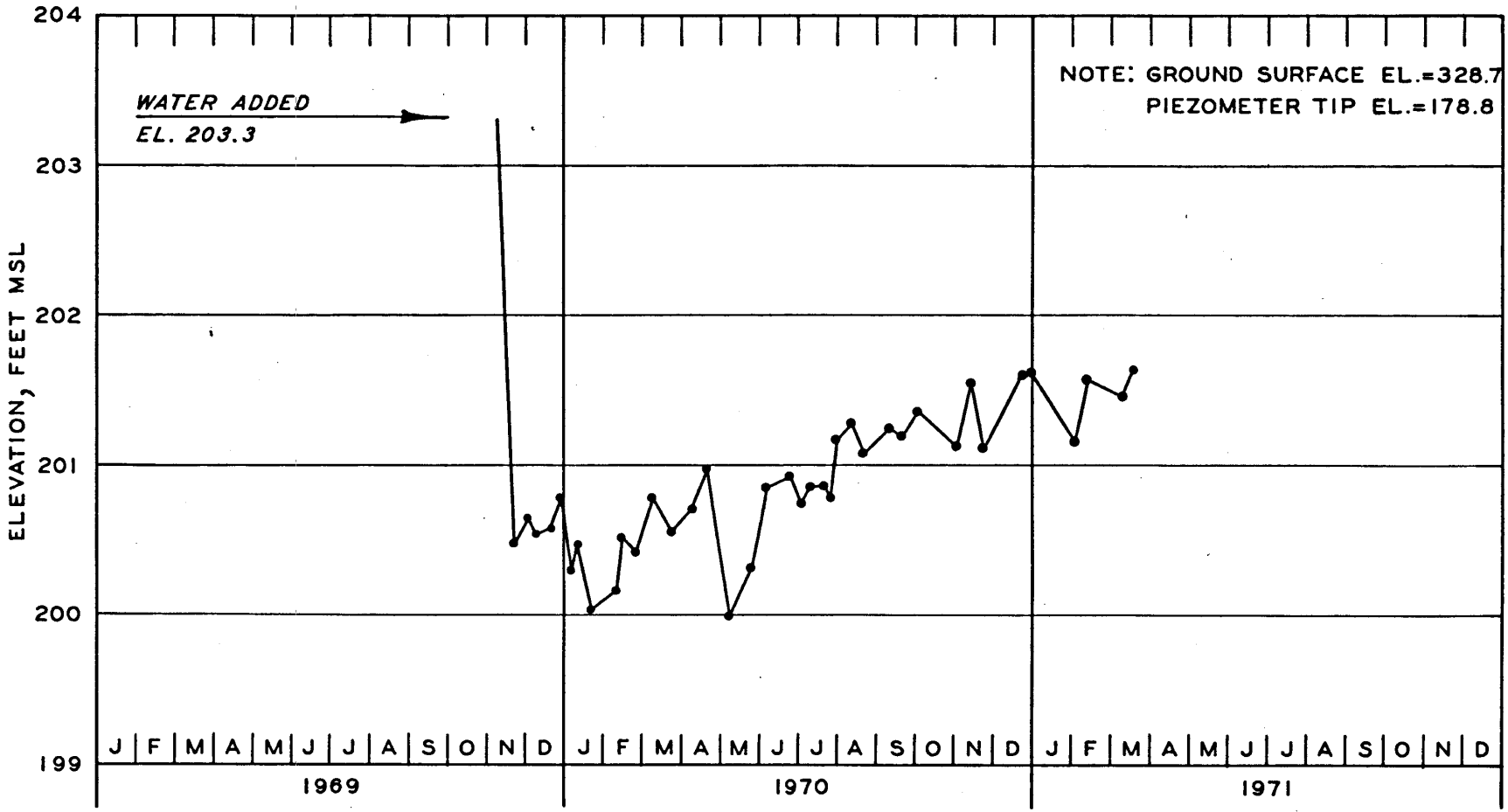

Fig. 14. P-3 piezometric elevations of water head

apparent deep water table about 127 ft below ground surface in early 1971. This water table rose about 1 ft during 1970. Additional Casagrande piezometers installed in May 1971 with tips at depths of 10 (P-8) and 20 (P-9) ft below the ground surface indicated a perched table at a depth of 5 ft in August 1971.

Soil Temperature Thermocouples

29. Soil temperatures at depths of 5, 10, 20, and 30 ft were monitored once monthly, and the results are shown in fig. 15. Temperature readings were first made with a very high quality nanovoltmeter and associated apparatus specifically oriented toward the measurement of suction pressures from the field thermocouple psychrometers. After suction readings were discontinued due to the low observed magnitudes, a thermoelectric portable Minimite pyrometer indicator was tried during August and September of 1970, but its readings were not sufficiently reproducible and accurate to be of any value. All subsequent readings were made with a portable precision potentiometer. Fig. 15 also shows monthly mean air temperatures. Thermocouple readings show that the influence of the air temperature on the soil becomes less with increasing depth, presumably because the soil is a heat insulator. The temperature at 30 ft is very near that at 20 ft and is subject to annual fluctuations of about 10 deg or about one half of that for soil at the 5-ft depth. Temperatures beneath the cover in the upper 10 ft of soil are usually several degrees warmer than those outside of the cover. Heat absorbed by the dark cover from the sun's radiation and loss of cooling from evaporation can be contributing factors. A very slight shrinkage from thermoosmosis is possible for this temperature differential.

Nuclear Moisture Gages

30. Readings from nuclear depth moisture probes permitted computation of the water content in percent dry weight w from

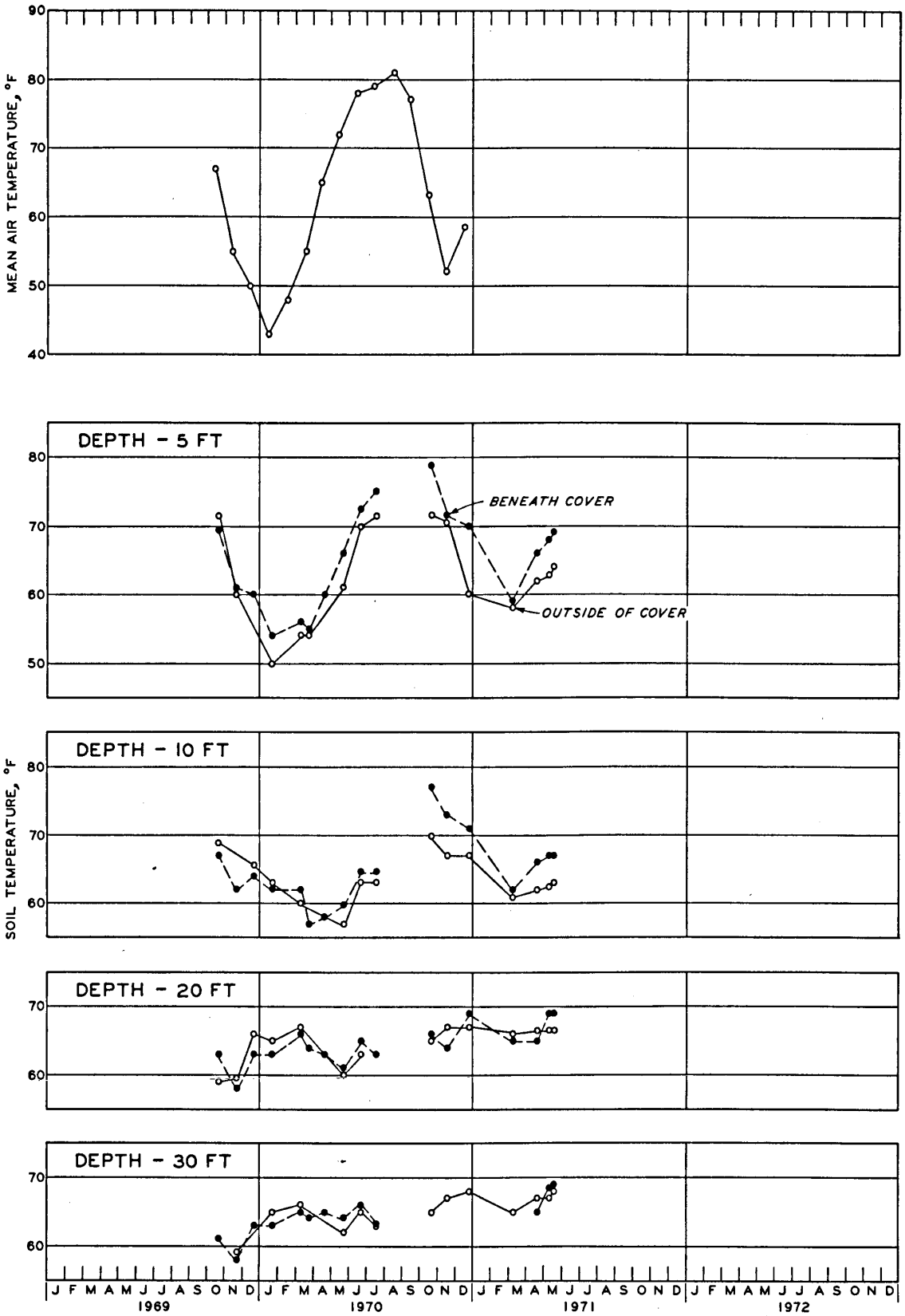

Fig. 15. Ambient and soil temperatures versus time

$$w = \frac{\gamma_\theta}{\gamma_m - \gamma_\theta} \times 100 \qquad (5)$$

where

γ_θ = water content, pcf

γ_m = wet density, pcf

The water content in pounds per cubic foot was measured with a Troxler depth moisture probe Model 1255, and the wet density was measured with a Model 1351 depth density gage. Two 1-min radiation count periods were taken at each 2-1/2-ft interval of depth in the water content access tubes (WCAT). The average count was converted to the water content or wet density in pounds per cubic foot from calibration curves determined by the equipment manufacturer. Comparisons of the laboratory wet densities of the undisturbed boring samples with those determined from the most closely dated nuclear probe readings are shown in fig. 16. The volume of the laboratory specimens was about 200 cc.

31. The soil water content profiles, computed on a dry weight basis, located along sections A-A and B-B (fig. 1) of the test site are shown in figs. 17 and 18, respectively. Laboratory water contents determined from jar samples of soil taken from the WCAT borings in December 1968 are also included in these figures. The water contents based on the factory calibration curves for the nuclear probes generally appear greater than those from the soil samples down to about 10 ft, but appear less at the deeper depths. Variations observed in water content by the nuclear probe measurements amounted to 3 or 4 percent at a particular depth, from March 1969 to April 1970. This band of water contents is probably caused by experimental error, because very little vertical ground movement has occurred during this period. A 3 percent increase in water content of 10- or 20-ft-thick Yazoo clay would be expected to cause several tenths of a foot of heave.

Heave Plugs

32. Accumulative heave profiles of the test section up to 23 December 1970 are given in table 10. Level readings of the surface

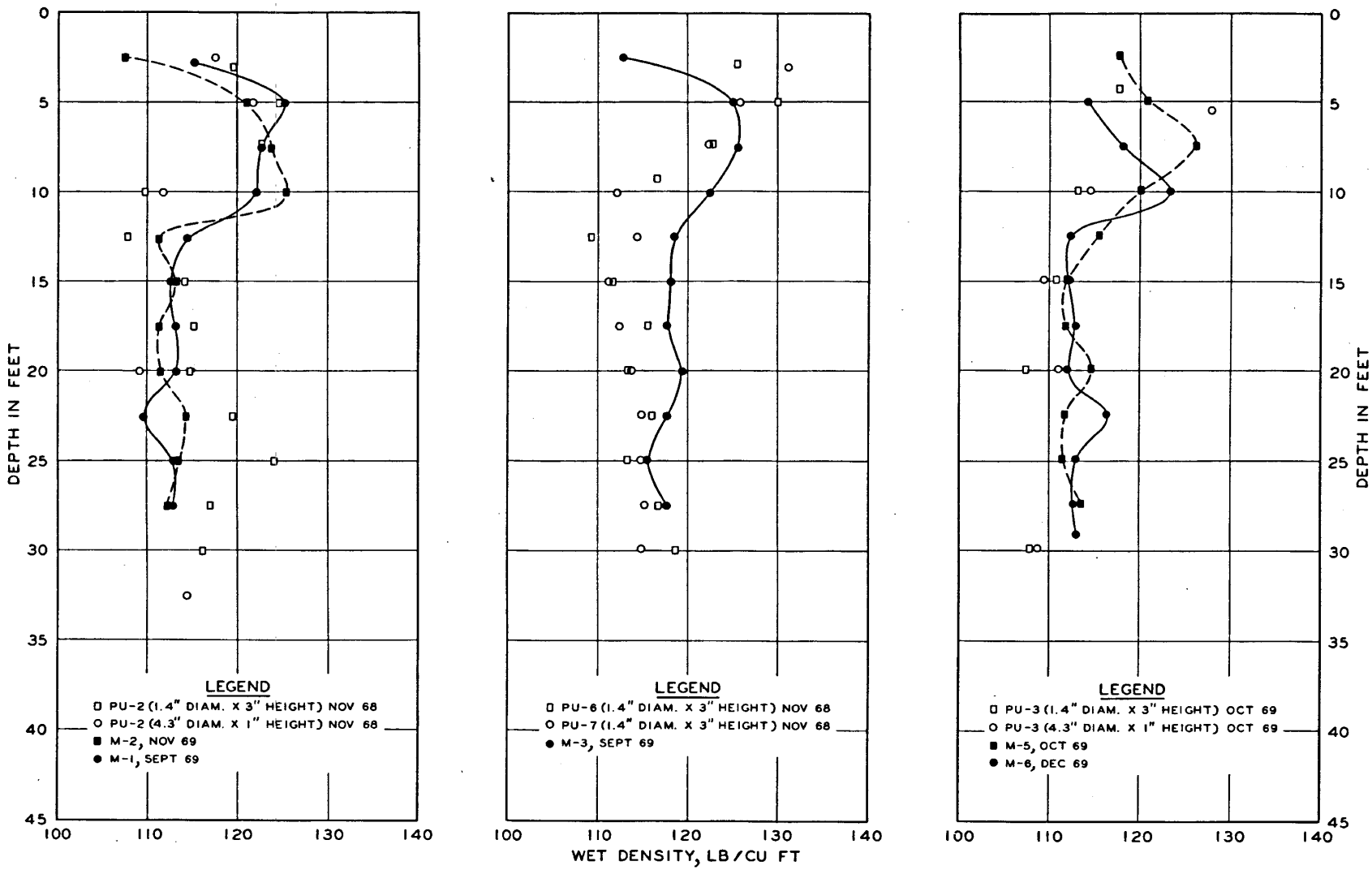

Fig. 16. Comparisons of wet density determined by laboratory and nuclear probe tests for different areas of test section

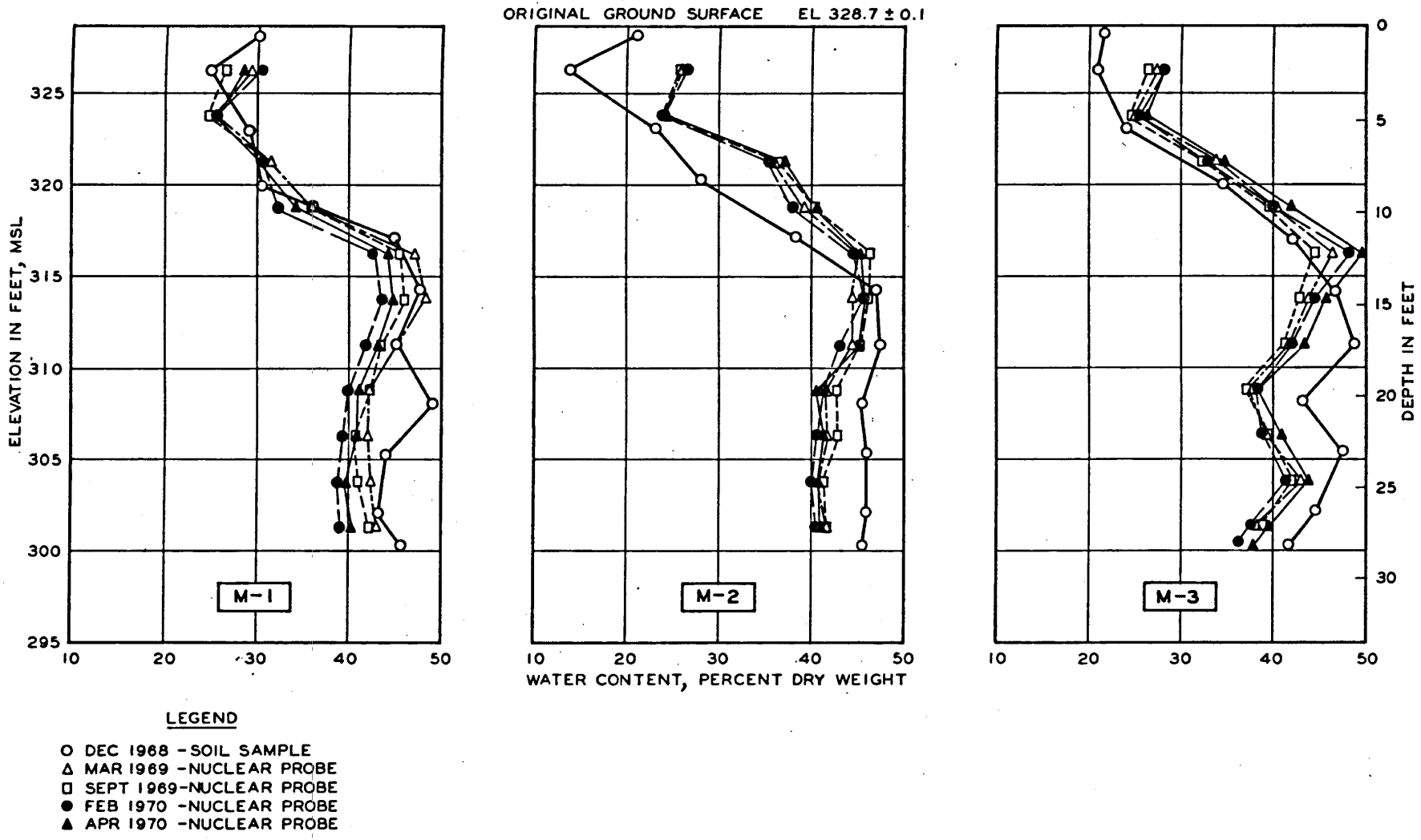

Fig. 17. Water content profile from nuclear probe tests for section A-A

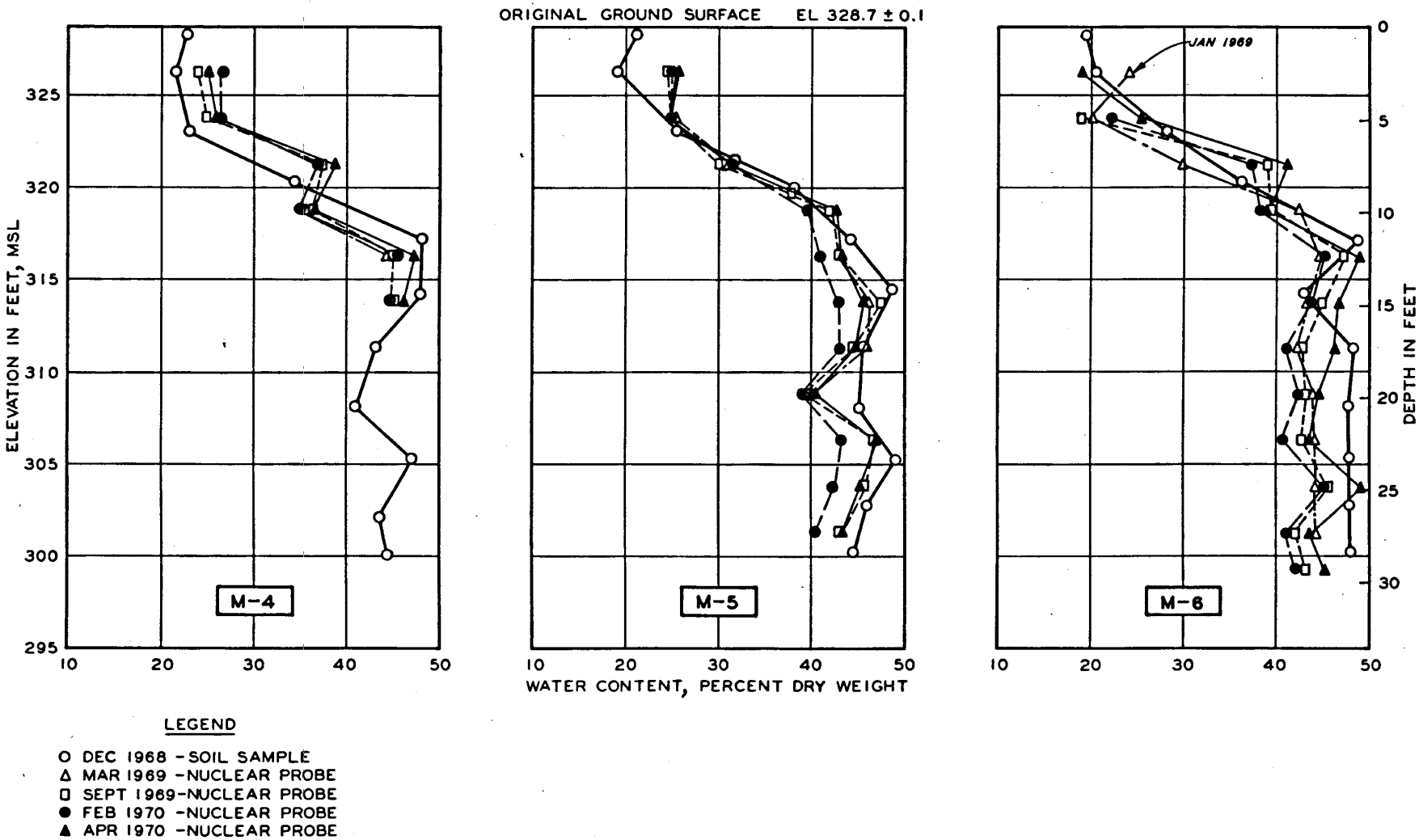

Fig. 18. Water content profile from nuclear probe tests for section B-B

heave plugs showed a differential heave of several hundredths of a foot at the perimeter of the covered area, as illustrated in fig. 19. Movement was not uniform, and there were heaves of up to 0.04 ft concentrated on the western and northern sides with some settlement in the east area. Part b of fig. 19 shows that almost the entire instrumented N-E quadrant initially settled, probably from the weight of the cover, but the section appeared to be heaving by December 1970. The heave profile determined from level readings of the deep heave plugs shown in fig. 20 again indicates early settlement under the covered area, but heave appears to be accumulating by December 1970.

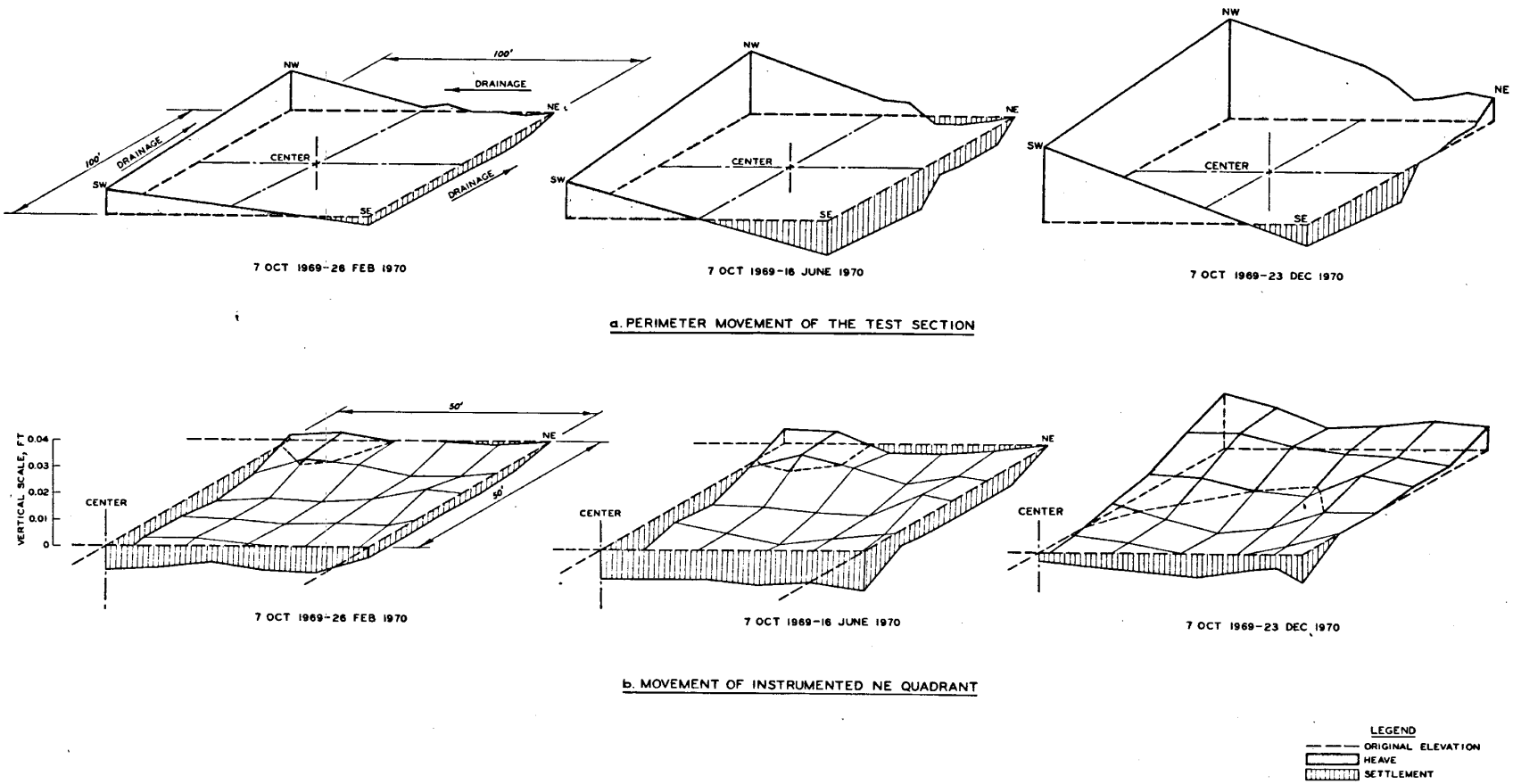

Fig. 19. Differential movement of test section

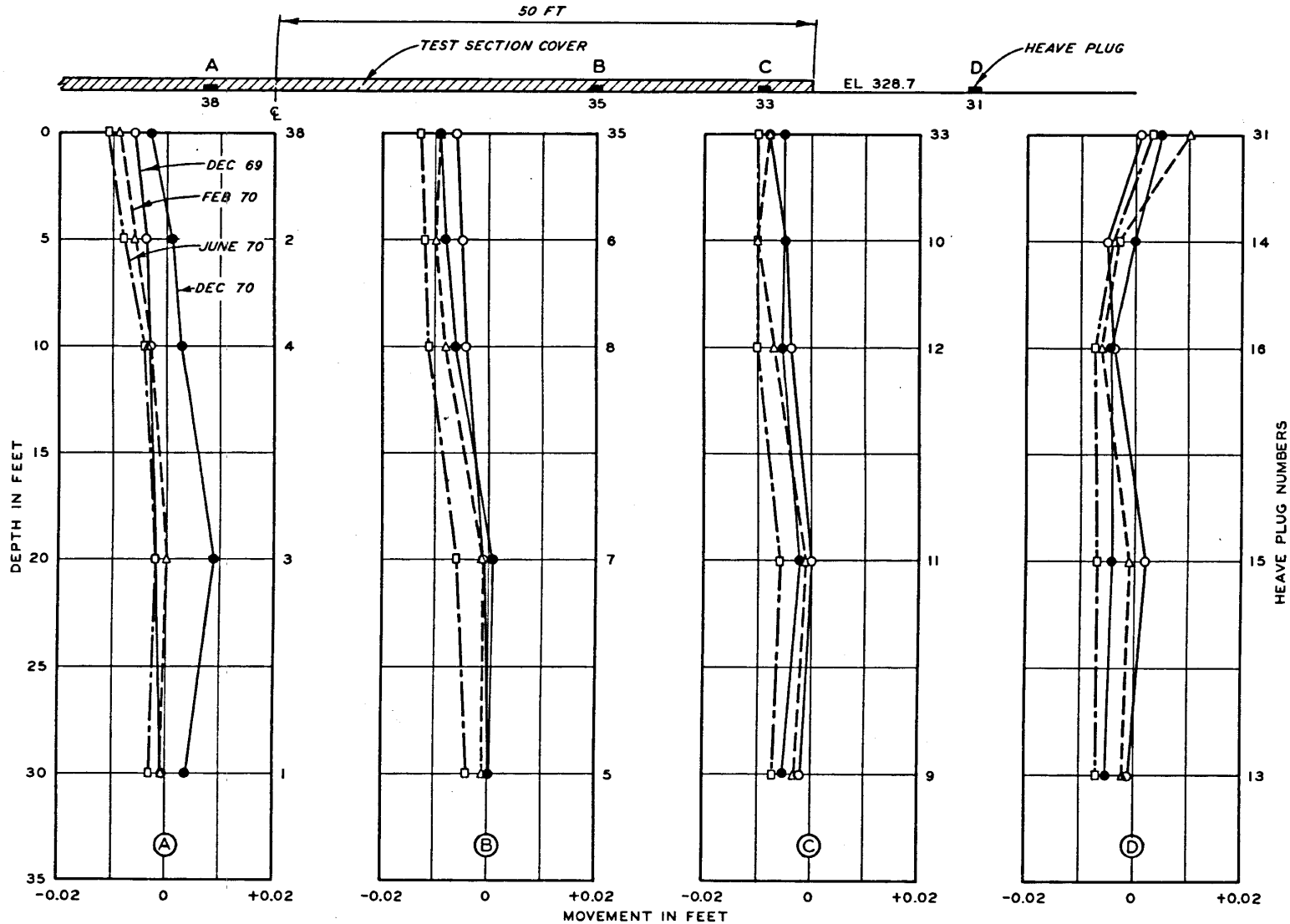

Fig. 20. Heave profile of section B-B

PART V: ANALYSIS OF RESULTS

Introduction

33. Studies by Gromko[8] and additional comparison of the data in table 1 with a diagram of potential expansiveness[35] show that the ability of the Jackson soil to swell should be high, except for the layer of lean clay between 4 and 8 ft in depth. The degree of expansion is converted to a swell potential and total volume expansion for some overburden loads in table 11.[19,35-38] Although the test site soil should possess considerable ability to swell, the actual amount of heave after placement of the cover depends on the conditions that lead to changes in soil moisture. Factors that largely control the original moisture profile were considered prior to evaluation of heave properties of the test section.

Original Soil Moisture Profile

34. The quantity of water in soil depends on a variety of factors that include the amount of rainfall, evaporation, transpiration from vegetation, drainage conditions, and depth to the water table. The amount of moisture that is retained in the soil profile from exposure to these field conditions can be expressed in terms of a driving force for moisture retention referred to as total soil suction.[30] Mechanisms responsible for the development of total suction pressure include water fixation by polar absorption, osmotic imbibition, and capillary surface tension. Total suction is commonly considered as the sum of osmotic and matrix components.

35. In situ soil is subject to a negative pore water pressure u_w given by[25,39,40]

$$u_w = \alpha\sigma - \tau \tag{6}$$

where

u_w = pore water pressure

α = compressibility factor

σ = applied pressure

τ = suction pressure free of external load

The compressibility factor α is the fraction of applied pressure that is effective in changing the pressure of the soil water and can be measured by determining the slope or rate of change of the bulk volume per dry weight of soil in grams per cubic centimeter multiplied by the unit weight of water (1.0 g/cc) versus water content.[40] This factor may be zero for incompressible soils such as clean sands at low saturation; but it is nearly one for all saturated soils, because the pressure is effectively transferred to the pore water.[25,39] The compressibility factor for heavy clays is commonly set equal to one, because these soils remain saturated over a wide range of water contents. If the applied pressure is caused by a gas, then this pressure is transferred to the pore water regardless of the degree of saturation, and the compressibility factor is also one.

36. The negative pore water pressure distribution prior to placement of the cover, determined from the laboratory swell tests, is given in fig. 21. These tests did not include any osmotic contribution to the suction pressure. Negative pore water pressures by the free swell method were determined from pressures required to reduce the volume of an undisturbed specimen saturated under a light load of 0.02 ton/sq ft to the original volume of the specimen prior to saturation. These data are shown as consolidation after swell at seating load double oedometer results in fig. 9 and are related to soil suction by[25]

$$P_1 = -\frac{c}{c'}\tau \qquad (7)$$

where

P_1 = maximum swell pressure

c/c' = complex factor dependent on several variables

τ = soil suction without overburden load

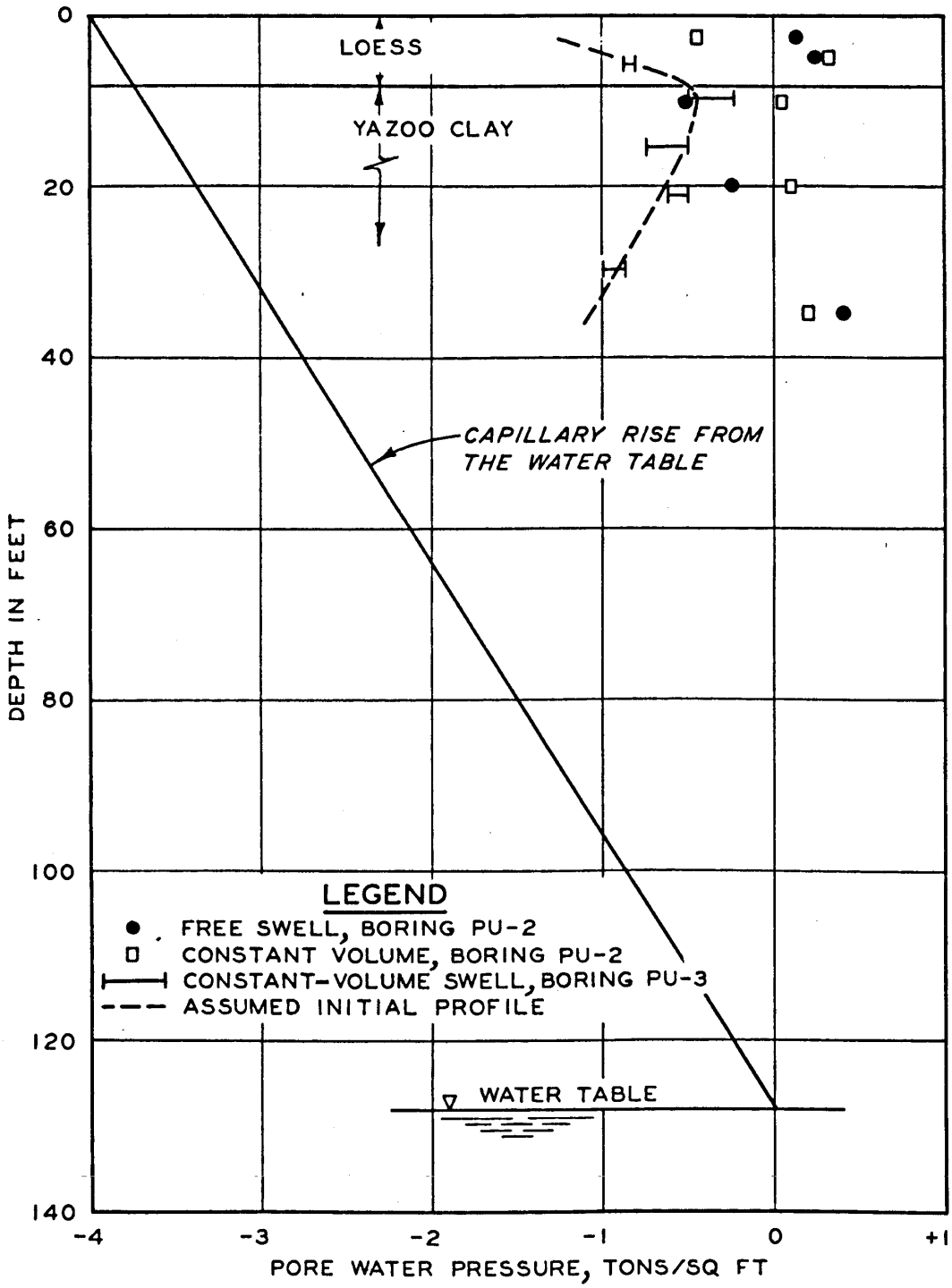

Fig. 21. Pore water pressure profile

The factor c/c' depends on the slope of the water content/suction curve, the fraction of the applied pressure effective in changing the pore water pressure during swell, the specific gravity, the surface tension of water, the void ratio of the soil, and the radius of curvature of gas bubbles in the soil. The ratio c/c' approaches one for saturated clays;[25] hence, the swell pressure can be assumed as equivalent to the suction pressure for the nearly saturated soils of this test site. The in situ negative pore water pressure u_w is determined from swell (suction) pressure results by equation 6 with α set equal to one. The constant-volume test is another source of swell pressure data. The negative pore water pressure from constant-volume swell tests, as shown in fig. 21, reaches a maximum of -0.4 ton/sq ft at about a 10-ft depth. The maximum observed pore water pressure at 10 ft is located where the permeability is about 10 times less than the permeability at 5 ft (see table 7). This change may tend to contribute to a maximum pressure head at 10 ft. Fig. 21 shows that negative pore water pressures contributed by capillary rise[40,41] from the deep water table do not exert appreciable influence on the actual soil moisture. The original soil pore water pressure profile during October 1969, for the purpose of heave computations, is considered as that given by the constant-volume swell test results of fig. 21. Heaves are estimated without regard to actual field moisture condition for the purpose of evaluating various heave prediction techniques on the basis of laboratory tests. The swell pressures determined from the consolidation tests are in agreement with suction pressures at natural water content determined by thermocouple psychrometers (fig. 11). If the soil specimens had not been nearly saturated, the consolidation tests would not have given suction directly, because of the relationship expressed by equation 7.

Moisture Change Beneath the Covered Area

37. The important causes for change in negative pore water pressure or water content of in situ soil given by Jennings and Kerrich[3]

are summarized in table 12. According to the information of this table with regard to the Jackson test site, evaporation and transpiration of water from the soil will occur only outside the perimeter of the cover. Some absorption of heat beneath the cover appears to be probable on the basis of the higher temperatures recorded beneath the cover in the top 10 ft of soil compared with the temperatures outside of the covered section shown in fig. 15. Infiltration of rainwater will occur in the surface soil outside the perimeter of the section and should control the moisture conditions beneath the cover in the absence of a shallow water table.[42] The climatic influence should become less towards the section center.[32] These qualitative characteristics suggest that a seasonal heave and shrinkage from rainfall and lack of rainfall will occur at the perimeter of this test section and diminish towards the section center. Additional heave from lack of evaporation should ultimately occur beneath the cover and diminish towards the perimeter.

38. All of the differential vertical movements observed up to the present time have been small, indicating the long-term nature of the heaving problem. The appearance of most heave in the western and northern areas of the covered section may be attributed in part to drainage conditions. Surface rainwater flows into the shallow drainage ditches adjacent to the covered section and is discharged from the northwest corner. Rainfall runoff flowing during previous years in the drainage ditches of the gravel road near the southeastern parts of the section may have contributed to moisture in these areas. The thickness of the sand layer along the western perimeter is also about 0.1 ft less than in the remaining area, thus contributing to a lower overburden pressure. Some methods are presented in the following paragraph for estimating the quantitative values of a final moisture profile beneath the covered area, based on climate, soil suction, and water content/plastic limit ratio measurements, but these are empirical and usually disregard local field conditions.

39. For covered areas where a shallow water table does not exist, moisture conditions at a given depth in the soil are controlled by the moisture balance between rainfall and evaporation.[6] If meteorological

factors such as the amount of rainfall, evaporation, and transpiration are expressed by the Thornthwaite MI, the negative pore water pressure can be considered a function of the MI.[32] For MI values calculated from Mississippi climatological data for 1968 and 1969 in the vicinity of Jackson, Mississippi,[31] the equilibrium negative pore pressures under a covered area shown in table 13 were estimated to be in the range of -0.25 to -0.7 ton/sq ft according to Russam and Coleman's relationship for heavy clays in Australia at 1-1/2- and 10-ft depths.[6,32,33] These results appear to be in good agreement with the negative pore water pressures computed from laboratory results on undisturbed boring samples taken before the cover was placed; and, consequently, only a small amount of heave is expected, based on the Australian data.

40. For covered areas with deep groundwater levels and an annual rainfall greater than 10 in. and for a known depth of seasonal moisture change, the final equilibrium negative pore water pressure is estimated by[30]

$$(h_m)_z = (h_m)_{z_o} + z_o - z \tag{8}$$

where

$(h_m)_z$ = negative pore water pressure at depth z in feet of head

$(h_m)_{z_o}$ = negative pore water pressure at the depth of seasonal moisture change z_o in feet of head

Richards[6] suggested that the depth of seasonal moisture change for arid areas is 10 ft before a structure is built. Assuming that this depth is also applicable to the Jackson site in consideration of Redus' experience of little water content change below 8 ft,[9] the final negative pore water pressure computed from equation 8 using a z_o of 10 ft is shown in table 14. These pressure calculations in terms of tons (force) per square foot indicate a slight wetting of the soil beneath the section cover.

41. Where the water table is deep, it has been found that, within a specific climatic zone, the ratio of field water content to plastic limit (w_n/w_p) for road subgrades tends to be constant.[43,44]

Equilibrium w_n/w_p ratios beneath pavements in several locations of Israel and beneath highway pavements in Oklahoma were determined to be between 1.1 and 1.3.[43,44] The initial w_n/w_p ratio of the Yazoo clay of the Jackson site from 8 to 20 ft is already greater than 1.3, but that for the loess above 8 ft is less (fig. 7).

42. The effects of initial soil moisture on damages to structures from heave in the southeast United States were evaluated to indicate that liquidity indices in excess of 10 percent on the average denote that severe damage would not occur on exposure to water.[10] As shown in fig. 7, most of the soil profile had a liquidity index greater than 10 percent, except for the surface soil. Other data directly applicable to the Jackson site show that the equilibrium water content in the humid southeast, where the soil is protected from evaporation, is equivalent to that at which the swell pressure equals the vertical overburden stress.[10] This saturated or equilibrium condition should be assumed as the basis of design for lack of additional information on actual field moisture changes.

Prediction of Heave Beneath the Covered Area

43. The analysis of heave prediction techniques cannot be complete until enough field data have been collected to indicate the ultimate heave and moisture profiles beneath the covered area. Field data thus far have shown that changes in the soil conditions will be slow and will require years of observation for accurate predictions. Based on laboratory data accumulated up to this time, some preliminary estimates of an ultimate heave profile and total heave are shown in fig. 22. All of these estimates assume a saturated final profile of zero negative pore water pressure down to the deep water table. Positive pore water pressures of a possible perched water table were not considered. The assumed initial negative pore water pressure is shown by the dashed line in fig. 21.

44. McDowell[45] suggested a method for estimating heave from classification tests that include measurement of the Atterberg limits,

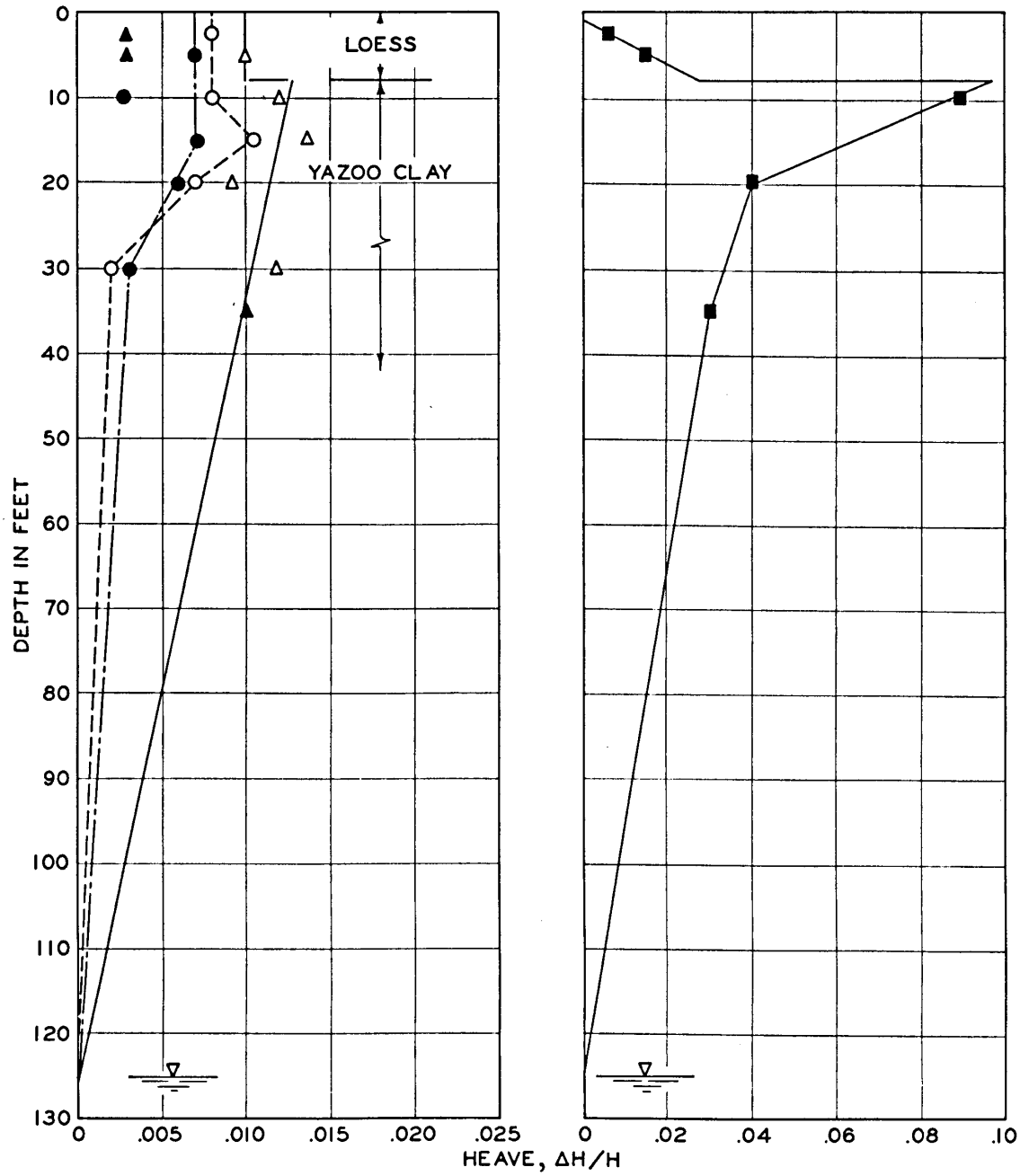

LEGEND

SYMBOL	METHOD	ESTIMATED TOTAL HEAVE
O----O	McDOWELL	0.3 FT
●—·—●	CONSTANT-VOLUME SWELL	0.4 FT
△——△*	SWELL OVERBURDEN (CORPS OF ENGINEERS)	0.8 FT
■——■	DOUBLE OEDOMETER	3.8 FT

*CLOSED SYMBOL INDICATES DATA FROM 1968 SAMPLES.

Fig. 22. Estimated ultimate heave profile and total heave of Jackson test section

percent smaller than a No. 40 sieve, natural water content, and overburden load. Heave is obtained from empirical curves developed from swell data of many soil specimens. On the basis of classification data given in fig. 4 for Jackson soil, this method indicated about 0.3 ft of heave.

45. The constant-volume swell diagrams given in fig. 8 permit determination of the void ratio from which the fraction of swell is computed by

$$\frac{\Delta H}{H} = \frac{e_f - e_o}{1 + e_o} \tag{9}$$

where

$\frac{\Delta H}{H}$ = fraction of heave for stratum of thickness H

e_f = final void ratio

e_o = in situ void ratio of original undisturbed specimen under overburden load

Heave may also be computed by[46]

$$\frac{\Delta H}{H} = \frac{C_e}{1 + e_o} \log \frac{\bar{\sigma}_i}{\bar{\sigma}_f} \tag{10}$$

where

$\frac{\Delta H}{H}$ = fraction of heave for stratum of thickness H

C_e = primary expansion index

e_o = original in situ void ratio

$\bar{\sigma}_i$ = initial effective stress

$\bar{\sigma}_f$ = final effective stress

if the initial $\bar{\sigma}_i$ and final $\bar{\sigma}_f$ effective stresses are known. The primary expansion index C_e is the change in void ratio per log cycle of load as the pressure is decreased from 1.0 to 0.1 ton/sq ft; it can be computed from the constant-volume swell data in fig. 8. The effective stress is determined from

$$\bar{\sigma} = P - \chi u_w \tag{11}$$

where

$\bar{\sigma}$ = effective stress

P = overburden pressure

χ = coefficient in unsaturated soil

u_w = pore water pressure

The coefficient χ is one for saturated soils and approaches zero as the soil dries. This coefficient may be greater than one for nearly saturated soils due to the surface tension of water.[47] An assumed relationship of the coefficient χ to negative pore water pressure useful for computing initial effective stress is given in reference 21. The final effective stress is the overburden load, because the pore water pressure is zero. By this method, swell was determined to be about 0.4 ft. From the swell (overburden) test data of the PU-3 boring samples given in table 5 and fig. 22, maximum heave as determined by the Corps of Engineers method[20] should be about 0.8 ft.

46. The double oedometer method[22] permits heave estimations based on initial and final void ratios read from the consolidation from natural water content and consolidation after swell curves of fig. 9 if the pressures are known. Pressures of the consolidation from natural water content curves are total pressures and not effective pressures; hence, the initial void ratio is determined from the total applied overburden pressure. Pressures of the consolidation after swell curve are effective pressures, because the pore water pressure is zero. The final void ratio is determined from the latter curve by noting that the final effective stress is also equal to the total applied overburden pressure. Heave computed from equation 9 by this method was 3.8 ft, which is more than four times greater than that determined by the other methods. The double oedometer testing procedure differs from the others, however, in that the specimen is permitted to swell completely from access to free water under a small (0.02 ton/sq ft) seating load before the overburden load is applied. The overburden pressure is applied during the other tests before the specimen is given access to free water.

47. An additional cause of heave in some foundation soils is the

chemical oxidation of pyrite and secondary reactions. The crystalline growth of pyrite oxidation products has been determined as the source of heaves of up to 1 ft in the shoreline areas of Lake Erie[48] and up to 4 in. in Ottawa, Ontario,[49,50] over a period of years that may continue for decades. The principal chemical reaction is

$$2FeS_2 + 2H_2O + 7O_2 \longrightarrow 2FeSO_4 + 2H_2SO_4 \qquad (12)$$

The pyritic oxidation can be catalyzed by autotrophic bacteria or a reactive component, such as pyrrhotite.[49] The ferrous sulfate may combine with water to yield limonite and sulfuric acid by[51]

$$FeSO_4 = 2H_2O \longrightarrow Fe(OH)_2 + H_2SO_4 \qquad (13)$$

Limonite is responsible for the characteristic greenish-yellow stain common on the face of fissures toward the bottom of the weathered zone in the Yazoo clay. The dehydration of limonite to hematite accounts for the reddish stains on the fissures. Gypsum formed from combination of lime with sulfuric acid by[51]

$$CaCO_3 + H_2SO_4 + 2H_2O \longrightarrow CaSO_4 \cdot 2H_2O + H_2CO_3 \qquad (14)$$

will migrate in solution and precipitate as flat crystals along cleavage surfaces, thus causing further volume increases. Oxidation of pyrite as a source of heave in Yazoo clay appears probable, because pyrite in the unweathered soil and characteristic reactant products including limonitic stains and gypsum crystals in the weathered zone have been observed and attributed to the decomposition of pyrite. This mechanism can be expected to threaten the stability of houses and buildings with basements or of any other structure placed in excavations or cuts where atmospheric conditions have been brought closer to the unweathered zone. A coating of bitumen sprayed immediately on an open excavation appears to have given satisfactory protection near Lake Erie.[48]

PART VI: CONCLUSIONS AND RECOMMENDATIONS

48. An analysis of the meteorological data showed that the Jackson, Mississippi, climate is wet, humid, and warm, leading to generally moist field soil conditions with corresponding small negative pore water pressures. Laboratory tests showed small negative pore water pressures distributed through the soil profile on the order of 1 ton/sq ft. A deep water table appeared to exist approximately 127 ft below ground surface.

49. Most estimations of field heave from laboratory tests showed swells from 0.3 to 0.8 ft, depending on the method of estimation. The double oedometer procedure yielded a potential heave of 3.8 ft, but this method permitted swell in the specimen from access to free water before the overburden loads were applied. These heaves were based on zero final pore water pressures to approximate unfavorable moisture conditions.

50. Heave beneath the covered test section has accumulated slowly, amounting to 0.04 ft after 1-1/4 years of observation. A comparison of these field data with the ultimate heave predicted in the laboratory tests points to a slow process that may require years before stabilization will occur.

51. Measurements of in situ water content of the soil profile down to 30 ft with nuclear moisture probes did not have sufficient reproducibility at the Jackson test section to be useful indicators of moisture changes. Further research into more accurate indicators of small moisture changes with depth may be worthwhile.

52. Thermocouple psychrometric devices had been developed for both laboratory and field measurements of negative pore water pressure. Preliminary results show that these devices are helpful indicators of suction pressure leading to swell in foundation clay soils. These devices can be applied to measure changes in water content from suction/water content relationships and may lead to more accurate measurements of small changes in moisture above the water table.

LITERATURE CITED

1. De Bruijn, C. M. A., "The Mechanism of Heaving," Transactions, South African Institution of Civil Engineers, Vol 5, Sep 1955, pp 273-278.

2. Hamilton, J. J., "Swelling and Shrinking Subsoils," Canadian Building Digest 84, Dec 1966, Ottawa, Canada.

3. Jennings, J. E. and Kerrich, J. F., "The Heaving of Buildings and the Associated Economic Consequences with Particular Reference to the Orange Free State Goldfields," Civil Engineering in South Africa, Vol 4, No. 11, Nov 1962, pp 221-248.

4. Sampson, E., Jr., Schuster, R. L., and Budge, W. D., "A Method of Determining Swell Potential of an Expansive Clay," Engineering Effects of Moisture Changes in Soils; Concluding Proceedings, International Research and Engineering Conference on Expansive Clay Soils, Texas A&M Press, Tex., 1965, pp 255-275.

5. Jennings, J. E., "The Heaving of Buildings on Desiccated Clay," Proceedings, Third International Conference on Soil Mechanics and Foundation Engineering, Vol 1, 1953, pp 390-396.

6. Richards, B. G., "Moisture Flow and Equilibria in Unsaturated Soils for Shallow Foundations," Permeability and Capillarity of Soils, Special Technical Publication 417, pp 4-34, Aug 1967, American Society for Testing and Materials, Philadelphia, Pa.

7. Johnson, L. D., "Review of Literature on Expansive Clay Soils," Miscellaneous Paper S-69-24, Jun 1969, U. S. Army Engineer Waterways Experiment Station, CE, Vicksburg, Miss.

8. Gromko, G. J., "Planned Field Testing of Expansive Clay Soil," Proceedings, Second International Conference on Expansive Clay Soils, Texas A&M University, College Station, Tex., Aug 1969.

9. Redus, J. F., "Experiences with Expansive Clay in Jackson, Miss., Area," Moisture, Density, Swelling and Swell Pressure Relationships, Highway Research Board Bulletin No. 313, pp 40-46, 1962, National Academy of Sciences-National Research Council, Washington, D. C.

10. Sowers, G. F. and Kennedy, C. M., "High Volume Change Clays of the Southeastern Coastal Plain," Proceedings, Third Panamerican Conference on Soil Mechanics and Foundation Engineering, Caracas, Venezuela, Vol 2, Jul 1967, pp 99-120.

11. "The Curse of Yazoo Clay," Better Roads, Vol 41, No. 1, Jan 1971, pp 15-17.

12. Johnson, L. D., "Mud Jacking Operation at the Jackson Municipal Airport," Memorandum for Record, Soil and Rock Mechanics Branch, Soils and Pavements Laboratory, Jul 1971, U. S. Army Engineer Waterways Experiment Station, CE, Vicksburg, Miss.

13. Moore, W. H. et al., "Hinds County Geology and Mineral Resources," Bulletin 105, 1965, Mississippi Geological, Economic and Topographical Survey, Jackson, Miss.

14. Krinitzsky, E. L. and Turnbull, W. J., "Loess Deposits of Mississippi," Special Paper No. 94, 1967, p 4, Geological Society of America, Boulder, Colo.

15. _____, "Foundation Investigation of Sump and Water Tower, Mississippi Basin Model, Clinton, Mississippi," Unpublished report, Mar 1948, Embankment and Foundation Branch, Soils and Pavements Laboratory, U. S. Army Engineer Waterways Experiment Station, CE, Vicksburg, Miss.

16. Buck, A. D., "Mineral Composition of the Yazoo Clay by X-Ray Diffraction Methods," Journal of Sedimentary Petrology, Vol 26, No. 1, 1956, p 67.

17. Lambe, T. W. and Whitman, R. V., Soil Mechanics, Wiley, New York, 1969.

18. Skempton, A. W., "The Colloidal 'Activity' of Clays," Proceedings, Third International Conference on Soil Mechanics and Foundation Engineering, Vol 1, 1953, pp 57-61.

19. Seed, H. B., Woodward, R. J., Jr., and Lundgren, R., "Prediction of Swelling Potential for Compacted Clays," Journal, Soil Mechanics and Foundations Division, American Society of Civil Engineers, Vol 88, No. SM3, Jun 1962, pp 53-87.

20. Headquarters, Department of the Army, "Engineering and Design: Procedures for Foundation Design of Buildings and Other Structures (Except Hydraulic Structures)," Engineer Manual EM 1110-345-147, Aug 1961, Washington, D. C.

21. Sullivan, R. A. and McClelland, B., "Predicting Heave of Buildings on Unsaturated Clay," Proceedings, Second Conference on Expansive Soils, Texas A&M University, College Station, Tex., Aug 1969.

22. Jennings, J. E. B. and Knight, K., "The Prediction of Total Heave from the Double Oedometer Test," Transactions, South African Institution of Civil Engineers, Vol 7, 1957, pp 285-291.

23. Fredlund, D. G., "Consolidometer Test Procedural Factors Affecting Swell Properties," Proceedings, Second Conference on Expansive Clay Soils, Texas A&M University, College Station, Tex., Aug 1969.

24. U. S. Army Engineer District, Fort Worth, CE, "Investigations for Building Foundations in Expansive Clays," Vol 1, Apr 1968, Fort Worth, Tex.

25. Kassiff, G., Livneh, M., and Wiseman, G., Pavements on Expansive Clays, Jerusalem Academic Press, Jerusalem, Israel, 1969.

26. Baker, R. and Kassiff, G., "Mathematical Analysis of Swell Pressure with Time for Partly Saturated Clays," Canadian Geotechnical Journal, Vol V, No. 4, Nov 1968, pp 217-224.

27. Jennings, J. E., "The Prediction of Amount and Rate of Heave Likely to be Experienced in Engineering Construction on Expansive Soils," Proceedings, Second Conference on Expansive Clay Soils, Texas A&M University, College Station, Tex., Aug 1969.

28. Rawlins, S. L. and Dalton, F. N., "Psychrometric Measurement of Soil Water Potential Without Precise Temperature Control," Proceedings, Soil Science Society of America, Vol 31, No. 3, 1967, pp 297-301.

29. Richards, B. G., "Psychrometric Techniques for Measuring Soil Water Potential," Division of Soil Mechanics Technical Report No. 9, 1969, Commonwealth Scientific and Industrial Research Organization, Australia.

30. Aitchison, G. D., ed., "Engineering Concepts of Moisture Equilibria and Moisture Changes in Soils," Moisture Equilibria and Moisture Changes in Soils Beneath Covered Areas, 1965, pp 7-21.

31. Weather Bureau, U. S. Department of Commerce, "Annual Summary," Climatological Data, Miss., Vol 73-74, No. 13, 1968-69, Environmental Science Services Administration, Washington, D. C.

32. Russam, K., "Climate and Moisture Conditions Under Road Pavements," Proceedings, Second African Regional Conference on Soil Mechanics and Foundation Engineering, Lourenco, Marques, 1959, pp 253-271.

33. Russam, K. and Coleman, J. D., "The Effect of Climatic Factors on Subgrade Moisture Conditions," Geotechnique, Vol 11, No. 1, 1961, pp 22-28.

34. Palmer, W. C. and Vaughn Havens, A., "A Graphical Technique for Determining Evapotranspiration by the Thornthwaite Method," Monthly Weather Review, Vol 86, No. 4, Apr 1958, pp 123-128.

35. Williams, A. A. B., "Discussion of the Prediction of Total Heave from the Double Oedometer Test," Symposium on Expansive Clays, South African Institution of Civil Engineers, 1957-1958, p 57.

36. Altmeyer, W. T., "Discussion of Engineering Properties of Expansive Clays," Proceedings, American Society of Civil Engineers, Vol 81, Separate No. 658, Mar 1955, pp 17-19.

37. Chen, F. H., "The Use of Piers to Prevent the Uplifting of Lightly Loaded Structures Founded on Expansive Soils," Engineering Effects of Moisture Changes in Soils; Concluding Proceedings, International Research and Engineering Conference on Expansive Clay Soils, Texas A&M Press, Tex., 1965, pp 152-171.

38. Holtz, W. G., "Expansive Clays--Properties and Problems," Quarterly of the Colorado School of Mines, Vol 54, No. 4, 1959, pp 89-125.

39. Croney, D. L., Coleman, J. D., and Black, W. P. M., "Movement and Distribution of Water in Soil in Relation to Highway Design and Performance," Water and Its Conduction in Soils, Highway Research

Board Special Report No. 40, pp 226-252, 1958, National Academy of Sciences-National Research Council, Washington, D. C.

40. Russam, K., "The Movement and Distribution of Moisture in Soils at Overseas Airfields," Research Technical Paper No. 58, 1962, Road Research Laboratory, Department of Scientific and Industrial Research, London.

41. Taylor, D. W., Fundamentals of Soil Mechanics, Wiley, New York, 1948.

42. Russam, K. and Croney, D., "Estimation of Subgrade Moisture Distribution," Transport-Communications Monthly Review, Vol 176, Dec 1961, pp 151-159.

43. Komornik, A., Wiseman, G., Ben-Yaacob, Y., "Studies of In-Situ Moisture and Swelling Potential Profiles," Proceedings, Second International Conference on Expansive Clay Soils, Texas A&M University, College Station, Tex., Aug 1969.

44. Shaw, L. K. and Haliburton, T. A., "Evaluation of Collected Data 1966-1969; Subgrade Moisture Variations," Interim Report VIII, Feb 1970, School of Civil Engineering, Oklahoma State University, Stillwater, Okla.

45. McDowell, C., "The Relation of Laboratory Testing to Design for Pavements and Structures on Expansive Soils," Quarterly of the Colorado School of Mines, Vol 54, No. 4, 1959, pp 127-153.

46. Carothers, H. P., "Engineered Foundations in Expansive Clay," Engineering Effects of Moisture Changes in Soils; Concluding Proceedings, International Research and Engineering Conference on Expansive Clay Soils, Texas A&M Press, Tex., 1965, pp 302-323.

47. Blight, G. E., "Effective Stress Evaluation for Unsaturated Soils," Journal, Soil Mechanics and Foundations Division, American Society of Civil Engineers, Vol 93, No. SM2, Mar 1967, pp 125-148.

48. "Structures Don't Settle in This Shale; but Watch Out for Heave," Engineering News Record, Vol 164, Feb 1960, pp 46-48.

49. Quigley, R. M. and Vogan, R. W., "Black Shale Heaving at Ottawa, Canada," Canadian Geotechnical Journal, Vol 7, No. 2, May 1970, pp 106-112.

50. Penner, E., Gillott, J. E., and Eden, W. J., "Investigation of Heave in Billings Shale by Mineralogical and Biogeochemical Methods," Canadian Geotechnical Journal, Vol 7, No. 3, Aug 1970, pp 333-338.

51. Morgenstern, N. R., "Black Shale Heaving at Ottawa, Canada: Discussion," Canadian Geotechnical Journal, Vol 7, No. 2, May 1970, pp 114-115.

Table 1

Composition of Yazoo Clay

Type of Mineral*	Mineral Name	Composition, %
	A. Mineralogical Composition[16]	
Clay	Kaolinite group	45
	Montmorillonite	30
	Illite	13
Nonclay	Quartz, feldspar, carbonate	10
	Total	98

Sample No.**	Depth ft	Composition, %										
		SiO_2	Al_2O_3	Fe_2O_3	CaO	MgO	Na_2O	K_2O	SO_3	P_2O_5	Ign.	Total
		B. Chemical Composition[13]										
AF-40	8.5 to 26.0	59.60	20.82	6.26	0.12	1.77	0.09	0.78	1.52	0.13	8.57	99.66
AF-40	26.0 to 40.5	52.20	18.14	6.61	7.47	1.79	0.10	0.75	0.64	0.12	9.19	97.01
AF-40	40.5 to 50.0	53.62	19.56	6.22	5.72	2.14	0.09	0.92	0.22	0.11	9.12	97.72

* Sample was taken about 1/2 mile from the Jackson test section at an elevation above mean sea level of 300 ft.

** Samples were from a boring that was 24 miles north of the Jackson test section.

Table 2

Classification of the Jackson Test Site Soil

Depth ft	Color	Classification	Specific Gravity	Plastic Limit	Liquid Limit	Shrinkage Limit	Plasticity Index	Natural Water Content %	Colloid Content %, <2 microns	Activity A
0 to 4	Brown	CH	2.68	20 to 26	50 to 58	--	28 to 34	20 to 25	22	1.6 to 1.9
4 to 8	Tan and brown	CL	2.71	15 to 20	35 to 50	19	17 to 32	25 to 35	19	1.2 to 2.0
8 to 26	Tan and gray	CH	2.73 to 2.75	17 to 28	60 to 117	15	43 to 89	35 to 50	67 to 72	0.7 to 1.4
>26	Blue and gray	CH	2.71	28 to 32	91 to 101	--	59 to 73	37 to 48		≈1 (est)

Table 3

Natural Water Content to Plastic Limit and Consistency Ratios

Boring	Depth, ft	Liquid Limit	Plastic Limit	Plasticity Index	Natural Water Content %	Natural Water Content/ Plastic Limit	Liquidity Index I_L
A-1	1.5	58.7	25.9	32.8	22.4	0.86	-0.11
	5.5	41.3	20.0	21.3	21.8	1.09	0.08
PU-2	2.3 to 3.4	51.2	22.3	28.9	22.6	1.01	0.01
	4.4 to 5.4	37.2	20.0	17.2	24.4	1.22	0.26
	9.4 to 10.2	103.0	27.3	75.7	42.5	1.56	0.20
	19.7 to 20.8	110.5	28.9	81.6	46.8	1.62	0.22
	34.8 to 35.9	91.5	32.7	58.8	38.8	1.19	0.10
PU-3	5.1 to 6.1	40.6	18.5	22.1	22.0	1.19	0.16
	9.0 to 10.4	99.2	25.7	73.5	40.3	1.57	0.20
	15.0 to 15.9	107.7	28.5	79.2	47.4	1.66	0.24
	20.2 to 21.1	108.2	29.2	79.0	43.5	1.49	0.18
	29.3 to 30.2	100.3	28.3	72.0	44.7	1.58	0.23

Table 4

Test Data, PU-2 Undisturbed Boring Samples*

	Swell (Overburden) Test								
			Initial			Final			
Depth Below Grade, ft	Dry Density pcf	Surcharge** tons/sq ft	Height in.	w %	S %	Height in.	w %	S %	Swell %
2.3 to 3.4	97.5	0.15	1.1549	23.8	89.1	1.1579	25.3	96.0	0.26
4.4 to 5.4	101.4	0.31	1.1436	23.3	96.5	1.1467	24.1	100.0+	0.27
19.7 to 20.8	74.3	1.15	1.1487	47.2	99.7	1.1488	48.7	100.0+	0.01
34.8 to 35.9	80.0	2.03	1.1374	39.7	96.7	1.1489	41.6	100.0+	0.99

	Swell Pressure Test						
			Initial		Final		
	Dry Density pcf	Void Ratio e	w %	S %	w %	S %	Swell Pressure tons/sq ft
2.3 to 3.4	96.4	0.736	22.6	82.3	25.0	91.0	0.60
4.4 to 5.4	98.4	0.702	24.4	93.2	25.4	97.0	0.04
9.4 to 10.2	77.9	1.19	42.5	97.5	43.5	99.8	0.56
19.7 to 20.8	96.1	1.33	46.8	96.1	49.7	100.0+	1.05
34.8 to 35.9	82.5	1.05	38.8	100.0+	39.8	100.0+	1.80

Note: w denotes water content; S denotes degree of saturation.
* Boring was located 7 ft NE of test section center and was drilled 20 Nov 1968.
** Excludes load from cover.

Table 5

Test Data, PU-3 Undisturbed Boring Samples*

Sample No.	Depth Below Grade, ft	Dry Density pcf	Surcharge tons/sq ft	Swell (Overburden) Test: Initial e_o	Initial w, %	Initial S, %	Final e_f	Final w, %	Final S, %	Swell, %, $\Delta e/(1 + e_o)$
2	5.1 to 6.1	105.0	0.36	0.590	21.9	98.0	0.606	22.5	100.0	1.00
3	9.0 to 10.4	81.6	0.61	1.044	40.3	100.0+	1.068	39.8	100.0+	1.17
5	15.0 to 15.9	74.3	0.96	1.277	47.3	100.0	1.308	48.4	100.0+	1.36
7	20.2 to 21.1**	77.5	1.25	1.160	43.2	99.0	1.180	41.8	97.0	0.92
8	29.3 to 30.2**	75.1	1.75	1.198	44.9	98.0	1.224	45.1	100.0	1.18

		Constant-Volume Swell Test: Dry Density pcf	Initial e_o	Initial w, %	Initial S, %	Final e_f	Final w, %	Final S, %	Under Surcharge Load: Load tons/sq ft	e	$P_s - P_o$ † tons/sq ft
2	5.1 to 6.1	104.1	0.610	22.1	97.0	0.606	23.5	100.0+	0.30	0.600	0.85
3	9.0 to 10.4	84.9	1.003	37.1	100.0+	1.016	37.4	100.0	0.55	0.987	0.40
5	15.0 to 15.9	74.8	1.293	47.4	100.0+	1.384	50.7	100.0+	0.90	1.267	0.63
7	20.2 to 21.1**	75.9	1.242	43.9	97.0	1.297	46.4	98.0	1.19	1.216	0.56
8	29.3 to 30.2**	75.6	1.229	44.6	98.0	1.295	46.5	97.0	1.69	1.200	0.93

Note: e_o denotes original void ratio; e_f denotes final void ratio; Δ denotes change.
* Boring was located 15 ft NE of the NE section corner and was drilled 14 Oct 1969.
** Samples contained gypsum; water contents were determined by a 140 F drying temperature. Sample 7: 10% gypsum. Sample 8: 20% gypsum.
† P_s = swell pressure; P_o = overburden pressure.

Table 6

Double Oedometer Consolidation Data from Undisturbed Boring Samples of PU-2

Depth Below Grade, ft	Consolidation from Natural Water Content: Dry Density pcf	e_o	w_o, %	S_o, %	Consolidation After Swell at Seating Load: Dry Density pcf	e_o	w_o, %	S_o, %
	A. Initial Properties							
2.3 to 3.4	95.9	0.745	22.4	80.8	95.6	0.750	22.5	80.5
4.4 to 5.4	97.2	0.721	25.1	93.3	96.9	0.727	25.4	93.8
9.4 to 10.2	77.6	1.20	43.8	100.0	76.0	1.24	45.4	99.9
19.7 to 20.8	73.7	1.31	47.9	99.6	73.5	1.32	47.6	98.4
34.8 to 35.9	82.8	1.04	38.2	99.5	81.9	1.07	39.4	100.0

Pressure tons/sq ft	Void Ratio at Indicated Depth Below Grade, ft: 2.3 to 3.4	4.4 to 5.4	9.4 to 10.2	19.7 to 20.8	34.8 to 35.9	Void Ratio at Indicated Depth Below Grade, ft: 2.3 to 3.4	4.4 to 5.4	9.4 to 10.2	19.7 to 20.8	34.8 to 35.9
	B. Consolidation from Natural Water Content					C. Condolidation After Swell at Seating Load				
0.015	0.745	0.721	1.20	1.31	1.045	0.759	0.738	1.427	1.465	1.119
0.25	0.732	0.705	1.17	1.29	1.034	0.735	0.710	1.361	1.42	1.101
0.5	0.727	0.696	1.15	1.28	1.024	0.726	0.698	1.311	1.39	1.092
1	0.719	0.686	1.13	1.27	1.010	0.713	0.685	1.249	1.35	1.081
2	0.706	0.671	1.11	1.25	1.000	0.697	0.667	1.175	1.29	1.064
4	0.686	0.653	1.08	1.22	0.990	0.672	0.644	1.086	1.23	1.034
8	0.646	0.620	1.01	1.15	0.975	0.631	0.605	0.987	1.15	0.996
16	0.589	0.572	0.91	1.05	0.939	0.574	0.553	0.873	1.04	0.949
32	0.524	0.516	0.79	0.89	0.865	0.516	0.496	0.738	0.867	0.873
Rebound										
8	0.538	0.531	0.88	1.00	0.934	0.529	0.510	0.853	0.993	0.947
2	0.553	0.545	0.95	1.11	0.958	0.543	0.524	0.944	1.14	1.017
0.015	0.578	0.581	1.04	1.17	0.964	0.642	0.629	1.408	1.62	1.167

Table 7

Estimate of In Situ Saturated Coefficient of Permeability from Laboratory Tests of PU-2 Boring

Sample No.	Depth, ft	Overburden Load tons/sq ft	Coefficient of Permeability 10^{-7} cm/sec
3	2.5	0.15	13.00
5	5.0	0.31	3.00
9	10.0	0.58	0.36
17	20.0	1.15	0.31
29	35.0	2.03	0.12

Table 8

Suction Pressure of Jar Samples

Depth ft	Location* of Heave Plug	Suction Pressure, tons/sq ft						Natural Water Content %
		Psychrometer No.					Average Pressure	
		15	6	28	15	23		
5	2				0.5	1.5	1.0	23.5
	6				1.5	1.5	1.5	24.0
	10	1.25	1.0	2.25			1.5	25.0
	14	1.0	1.0	1.5			1.25	24.0
10	4	1.5	1.0	2.0			1.5	41.0
	8	1.5	1.0	1.75			1.5	40.0
	12				2.0	1.0	1.5	41.5
	16				2.0	1.5	1.75	42.0
20	3				0.5	1.0	0.75	48.5
	7				0.5	1.0	0.75	44.8
	11				2.0	1.5	1.75	45.0
	15	2.5	2.0	3.0			2.5	43.0
30	1	3.0	3.0	5.0			3.75	44.2
	5	2.0	1.0	2.0			1.75	47.0
	9	2.0	2.5	2.0			2.0	42.1
	13	2.5	2.5	3.0			2.75	46.2

* See fig. 1.

Table 9

Suction/Water Content Relationship on Drying of PU-6 Undisturbed Samples

Depth, ft	Drying Time in Air at Room Temperature, hr	Water Content %	Suction, tons/sq ft Psychrometer No. 5	6	28	Average
4.3 to 4.5	0	24.3	0.75	0.5	--	0.75
	19*	24.3	1.0	0.75	0.75	0.75
	91*	20.3	1.75	1.75	1.5	1.75
	43*	22.9	2.0	1.75	1.5	1.75
	24	19.0	1.75	1.5	1.25	1.5
	24	9.8	23.0	26.0	24.0	24.0
	72	8.4	53.0	54.0	43.0	49.5
	44	5.9	--	--	85.0	85.0
7.2 to 7.4	0	35.4	0.75	1.0	1.5	1.0
	48*	34.0	1.5	0.75	1.5	1.25
	24	29.8	13.5	15.0	13.5	13.5
	8	29.7	11.5	12.5	11.5	11.5
	48	20.7	54.5	54.5	51.0	53.0
	48	20.0	79.0	--	71.0	75.0
18.5 to 18.6	0	49.2	1.5	1.5	2.0	1.75
	4	45.3	3.0	2.0	7.0	4.0
	6	41.0	8.5	9.5	10.5	9.5
	10	37.3	16.0	18.0	18.0	17.0
	24	29.7	38.0	40.0	32.0	37.0
	30	19.3	--	--	77.0	73.0
31.0 to 31.1	0	45.8	1.0	0.5	2.0	1.25
	8	39.4	13.0	13.5	12.0	12.5
	24	29.9	42.0	44.0	36.0	41.0
	31	26.8	61.0	58.0	59.0	59.0

* Air-dried in humid room.

Table 10

Heave Plug Data Points

Location	Depth ft	Elevation E_o, ft 7 Oct 69	Change in Elevation from E_o, ft 23 Dec 69	26 Feb 70	16 Jun 70	23 Dec 70
			A. Deep Heave Plugs			
2	5	323.659	-0.004	-0.006	-0.008	0.001
4	10	318.572	-0.003	-0.003	-0.004	0.003
3	20	308.684	-0.002	0.0	-0.002	0.009
1	30	298.550	-0.001	-0.001	-0.003	0.004
6	5	323.639	-0.005	-0.010	-0.012	-0.008
8	10	318.657	-0.004	-0.008	-0.011	-0.006
7	20	308.659	-0.001	-0.001	-0.006	0.001
5	30	298.633	0.0	-0.001	-0.004	0.0
10	5	323.654	-0.005	-0.010	-0.010	-0.005
12	10	318.644	-0.004	-0.007	-0.010	-0.005
11	20	308.633	0.0	-0.001	-0.006	-0.002
9	30	298.639	-0.002	-0.003	-0.007	-0.005
14	5	323.683	-0.005	-0.003	-0.004	0.0
16	10	318.682	-0.004	-0.006	-0.007	-0.004
15	20	308.655	0.002	-0.001	-0.007	-0.004
13	30	298.626	-0.001	-0.002	-0.007	-0.005
			B. Surface Heave Plugs			
6		328.698	0.0	0.0	0.0	0.009
41		328.721	0.0	-0.003	-0.013	-0.008
40		328.870	0.004	0.010	0.014	0.029
39		328.441	0.006	0.015	0.024	0.038
Row 1- 1		328.572	0.001	0.002	0.006	0.021
2		328.596	0.001	0.003	0.005	0.016
3		328.723	0.0	0.0	-0.003	0.008
4		328.729	-0.003	0.0	-0.003	0.009
5		328.701	-0.003	-0.001	-0.002	0.011
Row 2- 7		328.719	-0.003	-0.003	-0.007	0.002
8		328.758	-0.006	-0.005	-0.004	0.005
9		328.734	-0.006	-0.005	-0.007	0.006
10		328.686	-0.003	-0.001	-0.001	0.009
11		328.693	-0.003	0.001	0.004	0.014
12		328.706	-0.009	-0.005	-0.001	0.014
Row 3-13		328.746	-0.005	-0.007	-0.007	0.006
14		328.707	-0.002	-0.006	-0.008	0.005
15		328.739	-0.004	-0.007	-0.010	0.0
16		328.755	-0.005	-0.006	-0.011	-0.002
17		328.782	-0.007	-0.002	-0.003	0.006
18		328.717	-0.003	-0.004	-0.007	0.002
Row 4-19		328.699	-0.002	-0.004	-0.007	0.0
20		328.785	-0.005	-0.008	-0.010	0.0
21		328.790	-0.005	-0.007	-0.012	-0.006
22		328.741	-0.006	-0.008	-0.014	-0.008
23		328.750	-0.005	-0.006	-0.010	-0.003
24		328.729	-0.003	-0.005	-0.006	0.003
Row 5-25		328.693	-0.006	-0.005	-0.010	-0.001
26		328.751	-0.004	-0.005	-0.010	-0.004
27		328.722	-0.006	-0.007	-0.013	-0.008
28		328.787	-0.007	-0.009	-0.013	-0.009
29		328.816	-0.009	-0.010	-0.012	-0.005
30		328.747	-0.002	-0.004	-0.006	0.0
Center-38		328.706	-0.006	-0.009	-0.011	-0.003
37		328.708	-0.005	-0.008	-0.011	-0.005
36		328.775	-0.005	-0.006	-0.011	-0.007
35		328.841	-0.006	-0.009	-0.013	-0.009
34		328.790	-0.008	-0.010	-0.012	-0.006
33		328.773	-0.008	-0.008	-0.010	-0.005
32		328.804*	--	-0.004	-0.015	-0.011
31		329.185	0.001	0.010	0.003	0.005

* 23 Dec 69.

Table 11

Potential Expansion of Test Section Soil

Depth ft	Degree of Expansion	Volume Expansion, Air-Dry to Saturation, %, Surcharge Load, tons/sq ft			Swell Potential* Surcharge Load tons/sq ft	
		0.072 (References 19, 35)	0.325 (Reference 36)	0.500 (Reference 37)	0.072 (Reference 19)	0.072 (Reference 38)
0 to 4	High (critical)	20 to 30, 35	>1.5	3 to 10	5 to 25	20 to 30
4 to 8	Medium-low (marginal)	10 to 20	0.5 to 1.5	1 to 5	1.5 to 5	10 to 20
8 to 26	Very high (critical)	>30, 35	>1.5	>10	>25	>30
>26	Very high (critical)	>30, 35	>1.5	>10	>25	>30

* Swell potential is defined as the percent of swell under 144-psf surcharge load of a sample compacted at optimum water content to maximum density in the standard AASHO compaction test.

Table 12

Important Causes of Water Content Changes, Reference 3

Toward Desiccation	Toward Moisture Gain
Evaporation from hard soil surfaces and cracks	Infiltration of rainwater
Transpiration from plants, particularly from trees such as poplars or from deep-rooted grasses and crops	Fracture of subsurface drains or poor surface drains tending to concentrate water locally in the subsoil
Downward heating under structures such as brick kilns or other furnaces	Leakage of other hydraulic structures, such as reservoirs
	Rise of moisture from the water table

Table 13

Relationship of the Thornthwaite Moisture Index to Negative Pore Water Pressure

	Pore Water Pressure, tons/sq ft					
	1968				1969	
		Thermocouple Psychrometer				
Depth ft	MI = 44.2	Undis-turbed	Psychrometer Jar Samples	Swell Pressure PU-2 Boring	MI = 27.3	Constant-Volume Swell PU-3 Boring
1.5	-0.4				-0.7	
2.5				-0.45		
5		-0.6	-1.0	+0.25		-0.85 ± 0.05
10	-0.25	-0.7	-0.8	0.0	-0.4	-0.4 ± 0.1
15						-0.63 ± 0.1
20		-0.6	-0.8	+0.1		-0.56 ± 0.1
30		+0.4	-0.8			-0.93 ± 0.1
35				+0.2		

* Accuracy limited to ± 0.8 ton/sq ft.

Table 14

Equilibrium Negative Pore Water Pressure from Suction Data

Depth z ft	Original Pore Water Pressure $(h_m)_{z_o}$ tons/sq ft	Equilibrium Pore Water Pressure $(h_m)_z$ tons/sq ft
2.5	-1.05 (est)	-0.63
5	-0.85	-0.56
7.5	-0.6 (est)	-0.48
10	-0.4	-0.4

APPENDIX A: DESCRIPTION OF TESTS

1. The following is a description of laboratory tests performed on the boring samples. The swell (overburden) and constant-volume swell tests on samples taken from boring PU-3 from the test section on 14 October 1969 were performed by the Southwestern Division Laboratory of the U. S. Army Engineer Division, Southwestern, Dallas, Texas. The remainder of the tests were performed by the Soils and Pavements Laboratory, U. S. Army Engineer Waterways Experiment Station, Vicksburg, Mississippi.

Swell Pressure

2. The swell pressure test was performed in a fixed-ring consolidometer with the specimen maintained as closely as possible at constant volume. The specimen, initially placed between two air-dry porous stones, was allowed free access to water while loads were simultaneously applied to prevent any significant change of the dial gage reading. The swell pressure was considered as the final load at which dial readings taken 2 hr apart were substantially the same.

Swell (Overburden)

3. The undisturbed specimen was carefully seated in a fixed-ring consolidometer with a reservoir. Dry filter paper was placed between the specimen and air-dry porous stones. The inside of the reservoir was moistened, and the specimen and fixed-ring assembly were covered with cellophane to maintain constant moisture conditions. The specimen was then allowed to compress under the applied overburden pressure until movement had stopped or dial readings taken 24 hr apart were substantially the same. After movement had stopped, free water was added to the reservoir, and expansion of the specimen due to swell was observed.

Constant-Volume Swell

4. The undisturbed specimen was carefully seated in a floating-ring consolidometer with dry filter paper between the specimen and air-dry porous stones. The inside of the reservoir was moistened, and the specimen and ring assembly were covered with cellophane to maintain constant moisture conditions. The unsaturated specimen was loaded incrementally to the total overburden pressure with each loading increment held for time intervals of 1/2 to 1 hr. Loading increments were of 0.2, 0.4, 0.8, and 1.6 tons/sq ft, up to the surcharge load of the in situ soil. Free water was then added to the reservoir, and sufficient load was applied in small increments to prevent swelling until the swell pressure shown by P_s in fig. 8 was fully developed. The submerged specimen was unloaded from the swelling pressure in decrements of 0.8, 0.4, and 0.2 ton/sq ft, down to 0.1 ton/sq ft. Each unloading decrement was held for a minimum of 24 hr or until movement stopped.

Double Oedometer

5. This test was performed in two adjacent consolidometers simultaneously in order to minimize any variations of temperature or external vibrations that might affect the results. Two consolidometers were filled with undisturbed soil specimens cut from adjacent positions in the soil boring. The specimen to be saturated was placed between air-dry porous stones in a completely dry cell and held under a small load (0.02 ton/sq ft) for about 30 min. The deflection gage reading at the end of this period was noted and taken as the zero reading for this specimen. Water was then added to the cell through both the top and bottom porous stones. The soil specimen was allowed to swell until two dial readings taken about 24 hr apart were substantially the same. Additional loading increments at intervals of 24 hr were then applied to produce a conventional void ratio/log pressure curve. At the conclusion of the final load increment, the applied pressure was released, and the specimen was allowed to rebound to the

initial small load. The second specimen was placed in a consolidometer between two dry nonabsorbent stones. The interior surfaces of this consolidometer not in direct contact with the soil were moistened by wiping with a wetted finger. This action should have helped produce a practically saturated atmosphere within the cell to prevent the soil from either losing or taking up moisture. The cell was then sealed with a plastic membrane. The same period of 30 min was allowed at the small seating load before the initial reading was made. Additional increments of load were applied at the same time as those applied to the saturated specimen, and the deflection gage readings were noted.

Total Suction Pressure

6. The thermocouple psychrometer measures relative humidity in the soil by a technique called Peltier cooling. By causing a current to flow through a single thermocouple junction in the proper direction, that particular junction will cool, causing water to condense on it when the dew point temperature has been reached. Condensation of this water inhibits further cooling of the junction, and the voltage developed between the thermocouple and reference junctions is measured by the proper readout equipment. The voltage output can be calibrated to indicate total suction from measurements with known concentrations of salt solutions.

7. Laboratory suction pressure measurements were performed with the double thermocouple psychrometer sketched in fig. A1 and with a field design type psychrometer No. 28 similar to the one sketched in fig. A2. Characteristics of these devices are presented in table A1. A sufficiently stable temperature was achieved by using a 3- by 1- by 1-ft plywood box insulated with 2 in. of styrofoam to allow reproducibility of suction within the limits indicated in table A1 for a readout error of 0.5 microvolt. The test psychrometers were inserted in pint containers with the soil specimens, and the assembly was sealed with No. 13-1/2 rubber stoppers. The apparatus was then placed in the plywood box. (Preliminary equipment and procedures will be replaced with

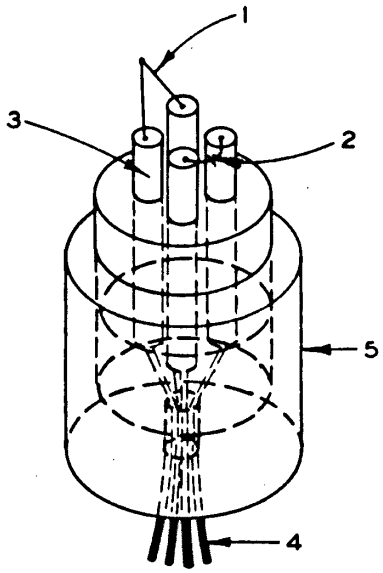

1 - LONG LEAD THERMOCOUPLE NO. 6
2 - SHORT LEAD THERMOCOUPLE NO. 5
3 - HEAT SINKS
4 - COPPER LEAD WIRE
5 - PLASTIC BODY

Fig. A1. Laboratory double thermocouple psychrometer

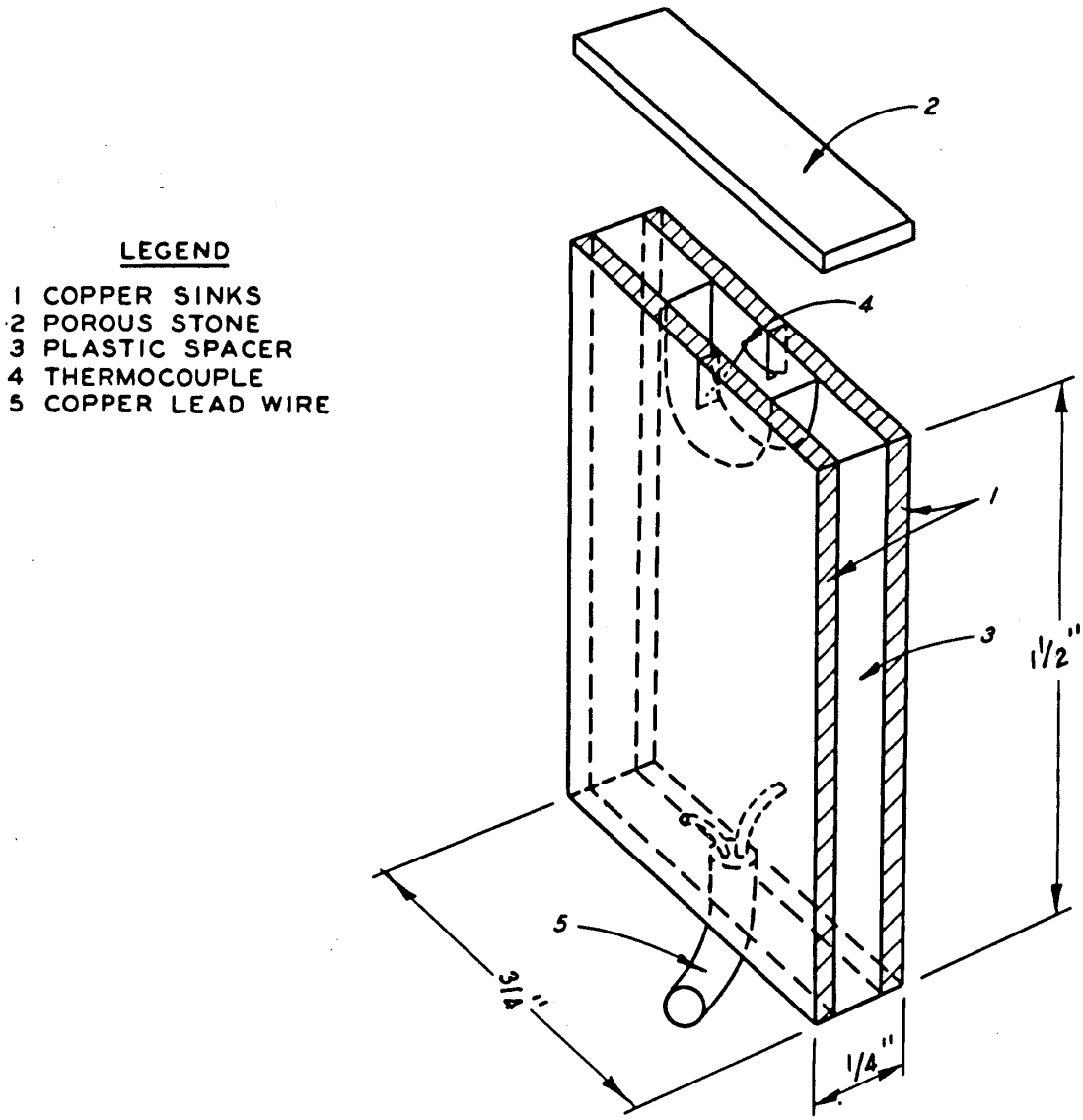

Fig. A2. Field design thermocouple psychrometer

permanent apparatus and procedures developed from the results of these and other measurements.) The microvolt output of the psychrometers, measured with a Keithley Model 148 nanovoltmeter, was converted to suction pressure by calibration curves determined from suction pressure measurements of known concentrations of potassium chloride solutions.

Table A1

Characteristics of Thermocouple Psychrometers

No.	Thermocouple Diameter mils	Approximate Length/Wire mm	Optimum Cooling Current, ma	Reproducibility tons/sq ft
5	2	2	12.5	±1.3
6	2	15	12.5	±1.3
15	4	2	45.0	±3.0
23	2	2	15.0	±1.3
28	1	2	10.0	±1.0

APPENDIX B: INSTRUMENTATION

1. The following is a description of the instruments installed at the Jackson test section. Installation of most of these instruments was completed in December 1968. A weather station, including a hygrothermograph placed within a shelter, an evaporation pan, and a manual rain gage, was also constructed 125 ft southeast of the test section center.

Piezometers

2. Four Casagrande piezometers were installed at a depth of 44 ft below the ground surface, and one was installed 74 ft below ground surface. In May 1971, Casagrande piezometers P-8 and P-9 were installed 10 and 20 ft below ground surface, respectively, near the northern edge of the test section. Because of the relatively impervious nature of the clay soils and the relatively long basic time lag of the Casagrande piezometers, a Geonor piezometer was also installed in the center of the test section 44 ft below ground surface. The Geonor is an electronic vibrating-wire piezometer that is very sensitive to small changes in pore water pressure. All Casagrande piezometers were installed in 5-1/2-in.-diam drill holes with a sand filter and grout backfill. The Casagrande piezometers were filled with water and then observed at frequent intervals until the water levels stabilized in order to determine the location of the piezometric water level.

3. An additional piezometer, P-3, was installed 150 ft below ground surface on 20 October 1969. A sketch of this piezometer is shown in fig. B1; it was located 15 ft northeast of the northeast corner of the test section. The piezometer tip was a resin-bonded, coarse-grained sand filter cemented over a plastic screen.

Heave Plugs

4. The test section was instrumented with two types of heave plugs. The deep heave plugs (see fig. B2) were simplified versions

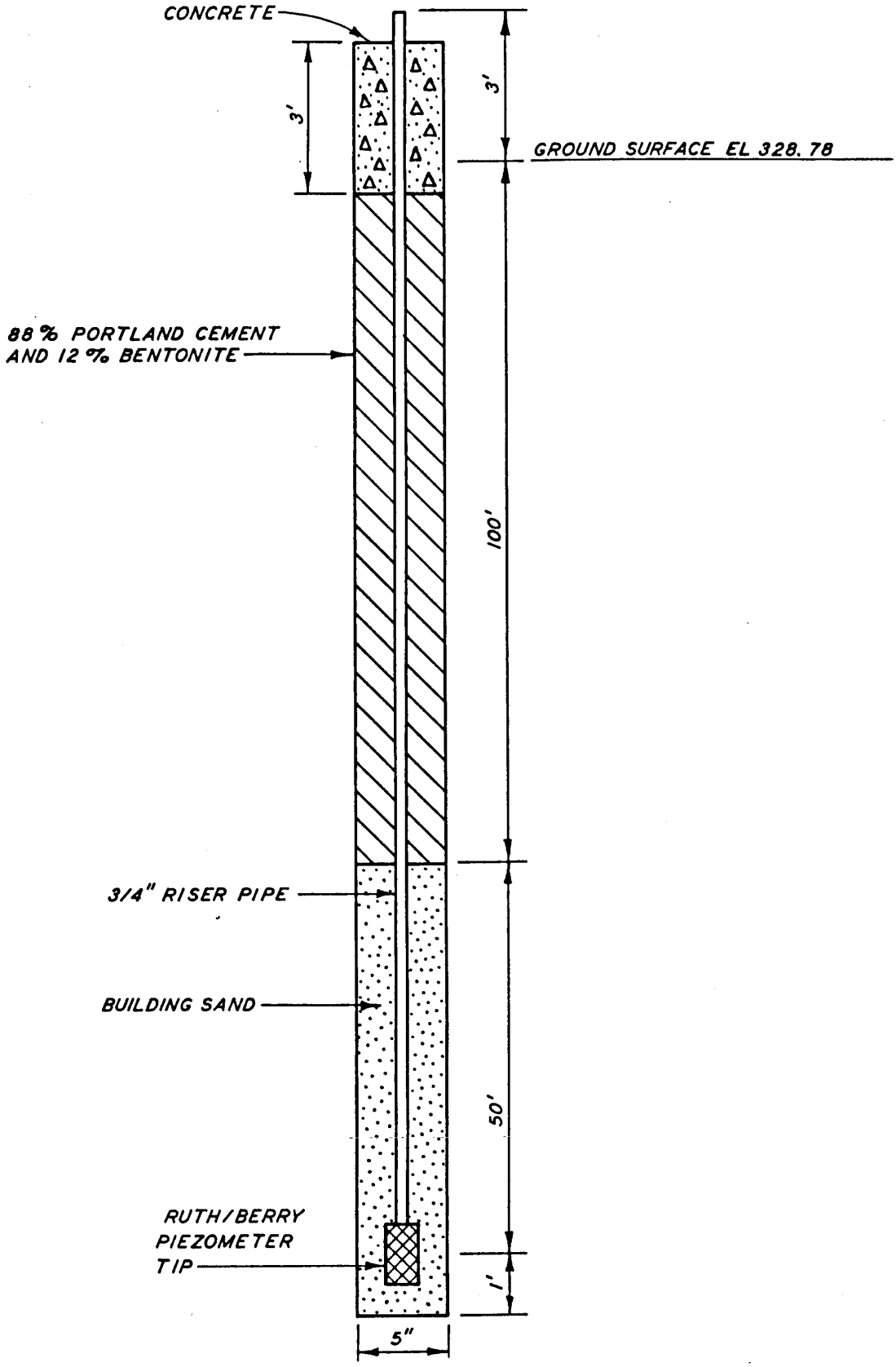

Fig. B1. Piezometer P-3

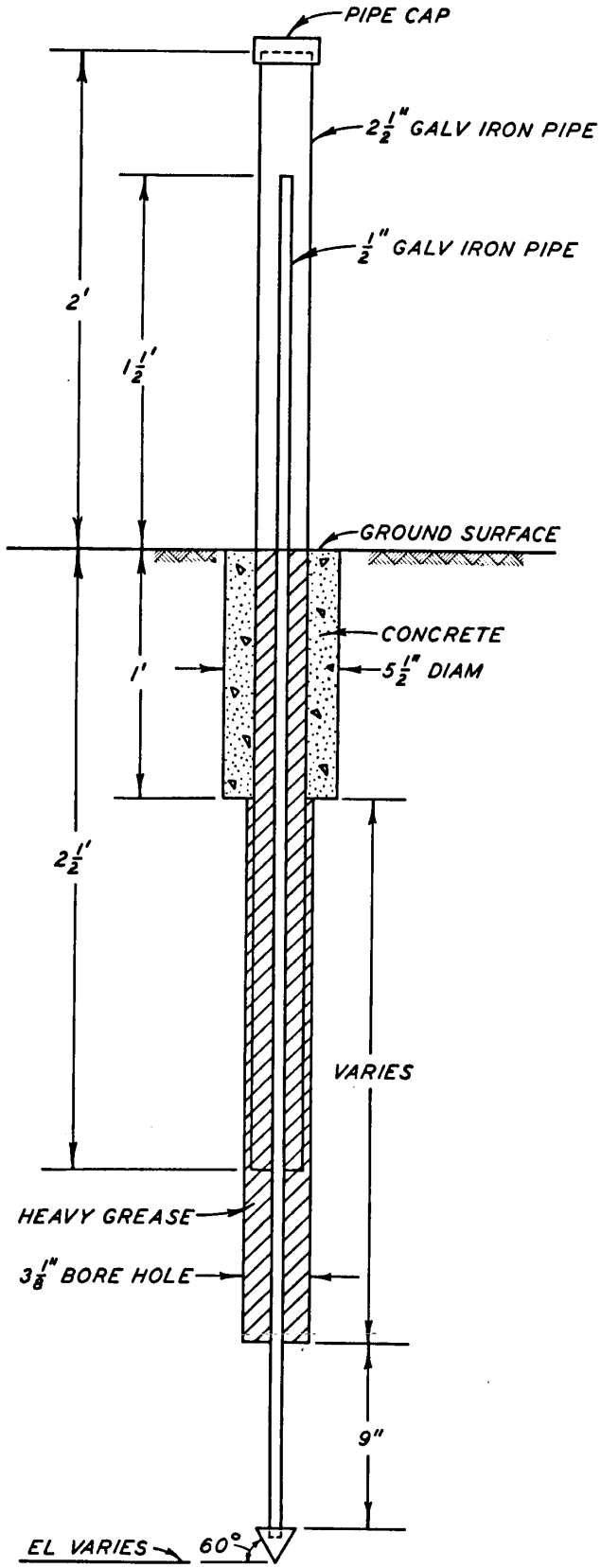

Fig. B2. Deep heave plug

of the MIT-type, free-standing bench mark. Placement of the surface heave plugs had to await construction of the impermeable cover on 7 October 1969.

5. The deep heave plug consisted of a 1/2-in. galvanized pipe of the required length attached to a 2-in.-diam conical stainless steel tip. The heave plug tips were placed at depths of 5, 10, 20, and 30 ft below ground surface in 3-1/8-in.-diam borings. Each boring was drilled to within 9 in. of the proposed heave plug tip elevation. The heave plug was then placed in the hole and seated at the required elevation by pushing it with the drill rig's N-rods, which were bearing on top of the conical tip. After withdrawing the N-rods from the hole, a 1/2-in.-diam pipe was positioned to within 9 in. of the tip, and heavy grease (specific gravity = 0.65) was pumped through it to fill the borehole to within 6 in. of the ground surface. The grease was sealed off at the ground surface by means of a 5-1/2-in.-diam concrete cap. Before sealing the grease, the top of the heave plug riser pipe was protected by inserting it in a 4-1/2-ft by 2-1/2-in.-diam pipe, which was extended 2-1/2 ft below ground surface.

6. Forty-one surface heave plugs were installed in the positions shown in fig. 1 of the main text. These plugs were 1 ft high and were placed over the bottom membrane of the impermeable cover. The plugs were made from 1/2-in. steel rods welded to 8- by 8- by 1/2-in. steel plates (fig. B3).

Water Content Access Tubes

7. Six 2-in.-diam by 30-ft aluminum tubes for nuclear determination of water content were located as shown in fig. 1. The tubes were installed by drilling to a depth of 29 ft below ground surface with a 2-in.-diam auger. Sections of 1-3/4-in. drill rod were then inserted into the aluminum tube, and both were then hoisted by the drill rig and positioned over the borehole. The combined weight of the aluminum tube and drill rod was sufficient to sink the tube about 5 ft into the hole. The tube was then pushed the remaining distance by using a pulley and

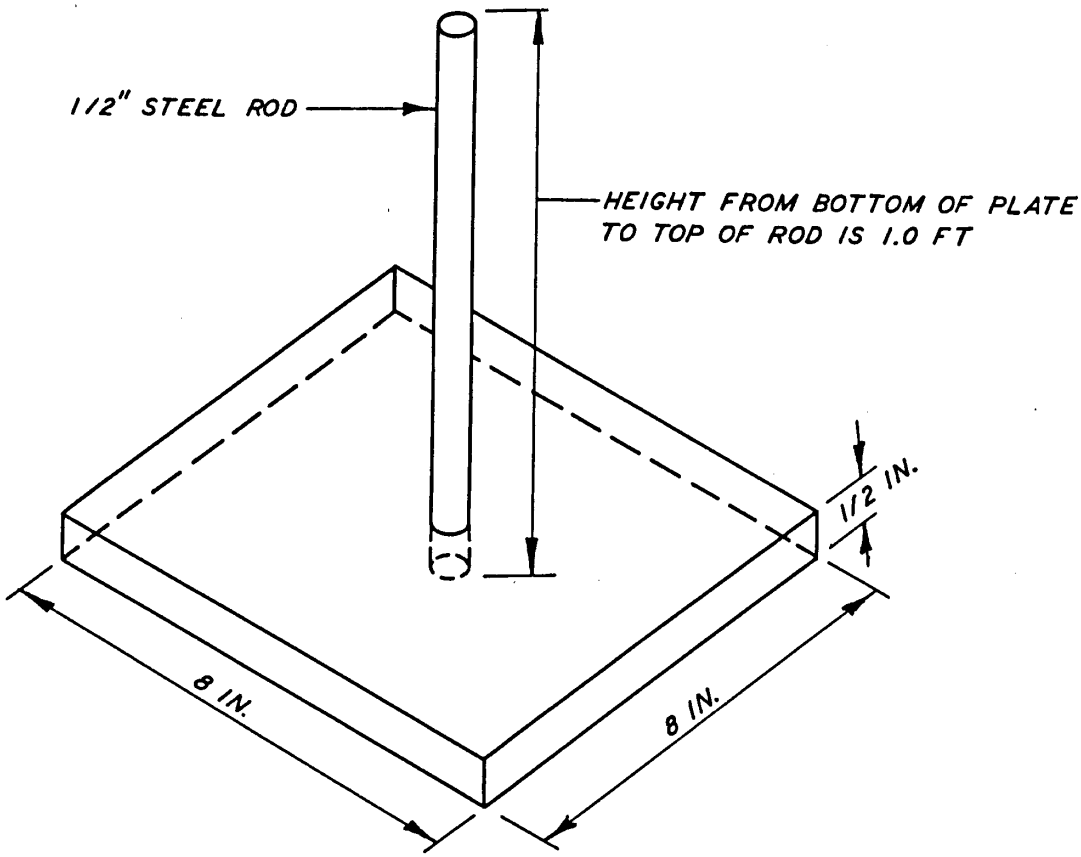

Fig. B3. Surface heave plug

cable system. Resistance was encountered during this installation process from friction forces between the soil and the tube, indicating that the tubes would be tightly held by the soil as required for accurate moisture readings.

Thermocouple Psychrometers

8. The field design thermocouple psychrometer (fig. A2) was developed at WES. It consisted of a 4- or 2-mil-diam chromel-constantan thermocouple soldered between two 3/4- by 1-1/2- by 1/16-in. copper heat sinks that were separated by 1/8-in.-thick sheet of Plexiglas. A small 1/4- by 3/4- by 1/16-in. porous stone was cemented over the thermocouple, forming an air chamber through which free flow of water vapor was permitted.

9. Sixteen psychrometers were installed at depths of 5, 10, 20, and 30 ft in 2-in.-diam drilled holes extending down to within 3 ft of the intended psychrometer locations. The remaining 3 ft was drilled with a 1-1/2-in.-diam auger. The psychrometers were positioned at the desired elevations and gently pressed into the bottoms of the holes at the locations indicated in fig. 1. The bottom 3 ft of the hole was then backfilled with the original soil and compacted. The remaining length of borehole was filled with grout to the ground surface. At the ground surface, the psychrometer cables were protected by 5 ft of 3/4-in. galvanized pipe, which was extended 2 ft into the ground. A plug was attached to the end of the wire to make subsequent readings more convenient.

Temperature Thermocouples

10. A thermocouple was secured to each psychrometer for the purpose of measuring the soil temperature at depths of 5, 10, 20, and 30 ft. The thermocouples were 20-gage, polyvinyl-coated, copper-constantan wire with soldered junctions protected by an inert epoxy coating compound.

Bench Mark

11. A 102-ft-deep permanent bench mark shown in fig. B4 was installed 120 ft east of the test section center, immediately north of the weather station, in June 1969. Elevation of the bench mark was determined to be 328.848 ft (on 23 June 1969) using a level loop from the Cincinnati bench mark of the Mississippi Basin Model at the WES Clinton installation. A subsequent level loop measurement performed 22 December 1970 did not show any significant change in elevation.

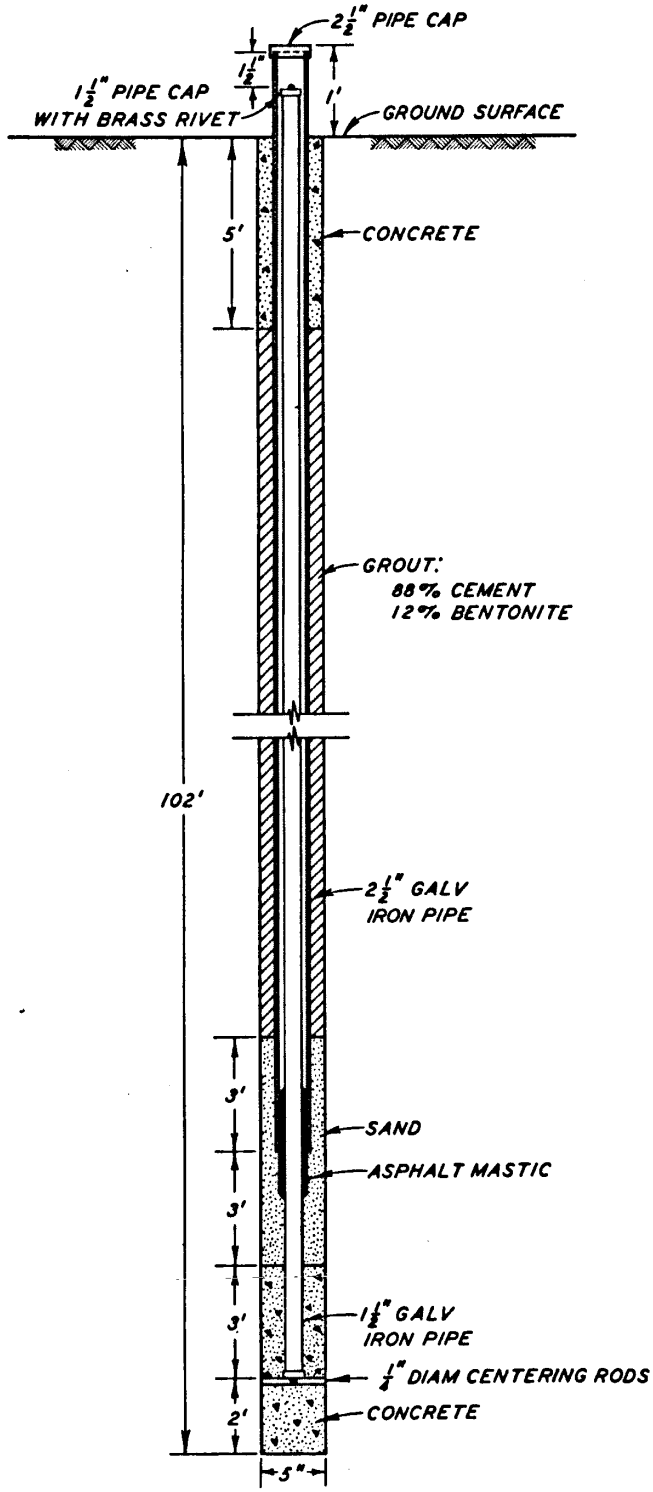

Fig. B4. Permanent bench mark

Unclassified
Security Classification

DOCUMENT CONTROL DATA - R & D

(Security classification of title, body of abstract and indexing annotation must be entered when the overall report is classified)

1. ORIGINATING ACTIVITY *(Corporate author)* U. S. Army Engineer Waterways Experiment Station Vicksburg, Mississippi	2a. REPORT SECURITY CLASSIFICATION Unclassified 2b. GROUP

3. REPORT TITLE

PROPERTIES OF EXPANSIVE CLAY SOILS; REPORT 1, JACKSON FIELD TEST SECTION STUDY

4. DESCRIPTIVE NOTES *(Type of report and inclusive dates)*

Report 1 of series

5. AUTHOR(S) *(First name, middle initial, last name)*

Lawrence D. Johnson

6. REPORT DATE	7a. TOTAL NO. OF PAGES	7b. NO. OF REFS
May 1973	83	51

8a. CONTRACT OR GRANT NO. b. PROJECT NO. c. d.	9a. ORIGINATOR'S REPORT NUMBER(S) Miscellaneous Paper S-73-28, Report 1 9b. OTHER REPORT NO(S) *(Any other numbers that may be assigned this report)*

10. DISTRIBUTION STATEMENT

Approved for public release; distribution unlimited.

11. SUPPLEMENTARY NOTES	12. SPONSORING MILITARY ACTIVITY Office, Chief of Engineers, U. S. Army, and U. S. Army Construction Engineering Research Laboratory

13. ABSTRACT

Differential swelling and shrinkage of foundation soils are responsible for considerable damages to buildings and other structures in many parts of the world. One of these regions is in Jackson, Mississippi, and the surrounding area, where many types of structures have been damaged from movements of the underlying Yazoo clay formation. Field test sections, each containing an instrumented 100-ft-square area covered with an impermeable material simulating a lightweight structure, have been planned for five regions. The first test section was constructed near Jackson in October 1969 in an area underlain by the Yazoo clay formation. Results of field and laboratory investigations conducted prior to construction were used to estimate the amount of heave anticipated in the test area. The climate at Jackson is warm and humid. The test section was constructed on a moist soil profile. Negative pore water pressures of about 1 ton/sq ft have been measured in the laboratory in undisturbed samples of Yazoo clay. Accumulative heave of less than 0.04 ft measured during 1-1/4 years of observations shows a pattern of very slow change that may require years before the maximum heave is developed.

DD FORM 1 NOV 65 1473 REPLACES DD FORM 1473, 1 JAN 64, WHICH IS OBSOLETE FOR ARMY USE.

Unclassified
Security Classification

Unclassified
Security Classification

14. KEY WORDS	LINK A ROLE	LINK A WT	LINK B ROLE	LINK B WT	LINK C ROLE	LINK C WT
Expansive clays						
Field tests						
Foundation investigations						
Soil properties						

Unclassified
Security Classification