ERDC/CHL CHETN-IX-12
December 2003

US Army Corps of Engineers®

Defining Angle and Spacing of Bendway Weirs

by Michael F. Winkler

PURPOSE: The purpose of this Coastal and Hydraulics Engineering Technical Note is to introduce a standardized, mathematical approach for layout of bendway weirs after the spacing and angle for the weirs have been selected. The Navigation Branch of the Coastal Hydraulics and Laboratory (CHL) at the U.S. Army Engineer Research and Development Center (ERDC) is conducting research to develop guidance for design of bendway weirs. The research weirs and weir fields influence current direction, magnitude, and lateral flow distribution and also focus on the effect the weirs have on navigation. The final product of the research provides guidance in selecting the spacing, number and angle for bendway weirs based on radius of bend, degree of bend, maximum velocity of currents, width of channel, and the design size tow. The Navigation Systems Research Program under Work Unit 004H84, "Effects of Bendway Weirs on Navigation," funded the research. The research was conducted using an undistorted 1:80 scale, model to prototype, semi-fixed bed navigation model designed specifically for this purpose.

INTRODUCTION: For the purpose of this research, a bendway weir is a submerged rock structure constructed in a river bend to maintain a uniform navigation channel through the reach. Bendway weirs are typically angled upstream (into flow) with angles varying from 0 to 30 deg, spaced 121.9 m (400 ft) to 426.7 m (1,400 ft) apart, and have variable lengths based on available channel cross section. The weirs usually have a level crest with a crest elevation high enough to intercept a large percentage of the flow but not high enough to impede normal river traffic. Weirs are typically built in sets of 4 to 14 weirs per bend and act as a system to alter secondary currents on the outside of a bend thus redirecting high velocity flow and dissipating energy in the bend.

APPROACH: During development of the bendway weir research test plan it became evident that there were varying approaches being used by designers to define the angle and spacing of existing bendway weirs. Preliminary results of research conducted at ERDC have shown that the angle and spacing of the weirs are primary design parameters and how these parameters are defined should be consistent. Previous navigation model studies have also shown adjusting the angle of some of the bendway weirs in the system can improve navigation conditions for tows moving through the reach. Therefore, all of the bendway weirs in the system may not be parallel so a common point for measuring the spacing and angle of the weir should be defined. If the bend of the stream or river is treated as a simple curve, then basic route location formulas can be applied to define the angle and spacing of the weirs relative to the curve of the bend. Using a Computer Aided Design (CAD) package the designer must determine the point of curvature (*PC*, upstream point on the outside bank line where the curve begins), point of tangency (*PT*, downstream point on the outside bank line where the curve ends), and place an arc through these points that best represents the outer bank line of the bendway. The *PC*, *PT* and the connecting arc should represent the best fit along the low water reference plane (*LWRP*), or the known minimum water elevation, for the outside bank line. This best fit arc becomes the construction reference line (*CRL*) and is used for the layout and construction of

the bendway weirs. The remaining layout of the bendway weirs can be performed with the aid of a CAD package. It is recommended the CAD drawing be geographically referenced to an appropriate coordinate system (i.e., local coordinate system) so when the design is complete, accurate locations and azimuths can be determined. It is also recommended that any aerial photographs available be used as a background to aid in determining the outside bank line of the bendway. A typical channel cross section and the relationship between the *LWRP* and the center line of a bendway weir can be seen in Figure 1. So not to impact tow traffic the weir crest should be below the known low-water elevation.

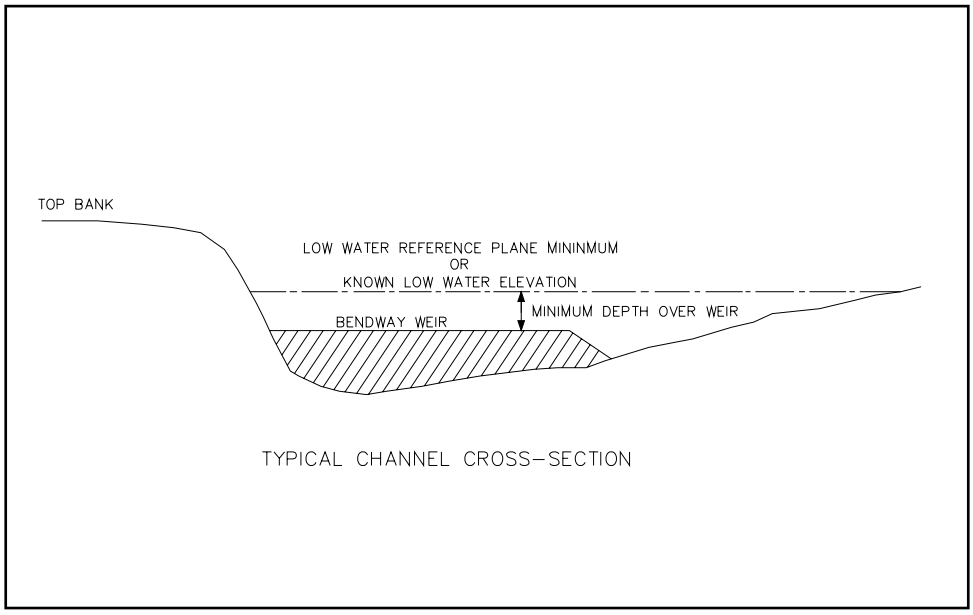

Figure 1. Typical channel cross section with bendway weir in place

APPLICATION: A physical hydraulic model investigation was conducted at CHL. The model study was conducted in a 700-m- (200-ft-) long by 22.9-m- (75-ft-) wide by 0.61-m- (2-ft-) deep flume. The flume was filled with uniformly graded sand and various typical bends with a range of radii. Widths are being investigated. For the purpose of describing the recommended method of defining weir spacing and angle, a specific test plan will be used in a detailed example. A 152.4-m- (500-ft-) wide bend with a 1,219.2-m (4,000-ft) radius was molded in the sand flume at an undistorted scale of 1:80, model to prototype. These dimensions represent a typical bend in a small navigable river such as the Arkansas or Red Rivers. For this example five bendway weirs will be placed using a 305-m (1,000-ft) spacing and 20-deg upstream angle. The weirs were to be constructed near the center of the bend out of course limestone aggregate that was properly sized to represent Grade A stone. The following step-by-step approach is recommended for determining the layout of the bendway weirs based on the selected criteria.

The spacing and angle of the weirs can be defined using the following steps:

a. Using a CAD package and a properly geographically referenced drawing, the *PC* and the *PT* should be determined along the outside of the bendway at the *LWRP*, or the known minimum

water elevation, (Figure 2). Step 5, an arc will be drawn connecting the *PC* and the *PT* that will be known as the *CRL*.

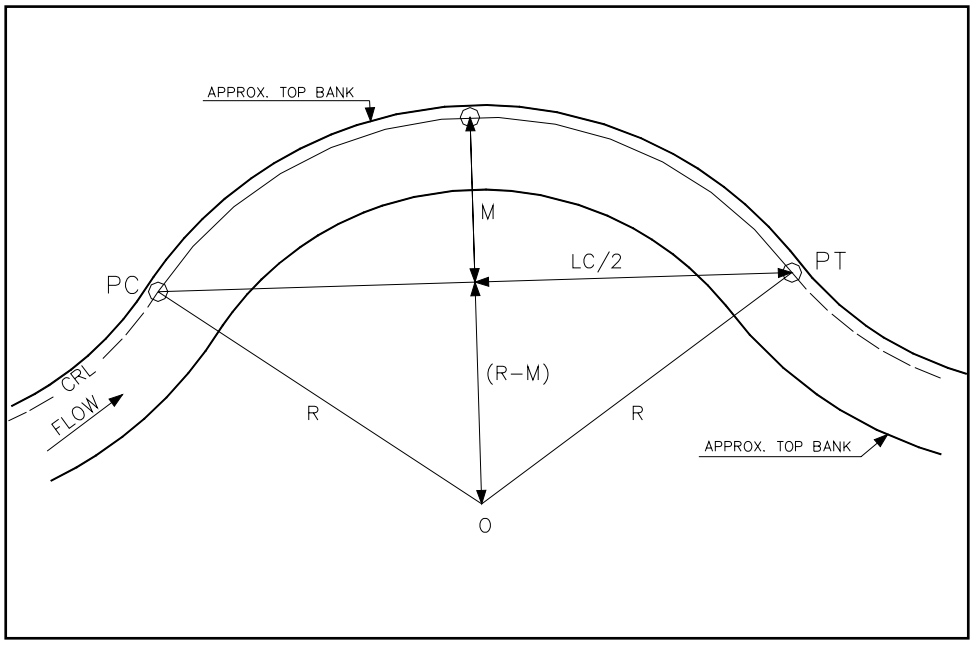

Figure 2. Typical bendway and how to define radius of bend

b. After the *PC* and the *PT* have been defined, the long chord (*LC*, a straight line connecting the *PC* and *PT*) can be established (Figure 2).

c. The next step is to establish the middle ordinate *M*. The middle ordinate is a specific length of the ordinate from the middle of the *LC* to the middle of the curve (*CRL*) (Figure 2).

d. Knowing the lengths of the *LC* and *M*, the Pythagorean theorem can be used to solve for the radius of the bendway using the following formula, (see derivation below). $R = (4M2 + LC2)/8M$. In this example the length of the $LC = 1{,}997.41$ m (6,553.21 ft) and the length of $M = 519.89$ m (1,705.69 ft). Using these values for the *LC* and *M* to solve for *R*, $R = 1{,}219.2$ m (4,000.00 ft).

$$R^2 = (R - M)^2 + (LC/2)^2$$
$$R^2 = R^2 - (2RM) + M^2 + (LC^2/4)$$
$$0 = -2RM + M^2(LC^2/4)$$
$$2RM = M^2 + (LC^2/4M)$$
$$R = M^2/2M + (LC^2/8M)$$
$$R = (4M^2 + LC^2)/8M$$

e. Two radius lines *R* (1,219.2 m (4,000.0 ft)) are drawn from the *PC* and the *PT*, the point where their end points intersect is defined as the ordinate *O*. A 1,219.2-m (4,000.00-ft) radius arc can be drawn from the ordinate that will be the *CRL*. A curve is an arc over which two intersecting tangent lines traverse; the tangent lines define the radius of the curve.

f. After the radius length has been calculated, the degree of offset can then be calculated to obtain equal spacing between weirs throughout the bend. The degree-offset *d* will be added to the azimuth of the radius line *R* that connects the *PC* to *O*. Using the formula $d = 2(\sin^{-1}(c/2R))$ to solve for *d* using the radius and the desired spacing *c*. Solving the previous equation for the degree offset where $R = 1{,}219.2$ m (4,000.00 ft) and $c = 304.8$ m (1,000 ft), $d = 14.36$ deg. Thus by drawing lines from the ordinate *O* and adding *d* to the azimuth of the line *R*, the designer will have a series of lines that intersect and are perpendicular to the *CRL* (Figure 3).

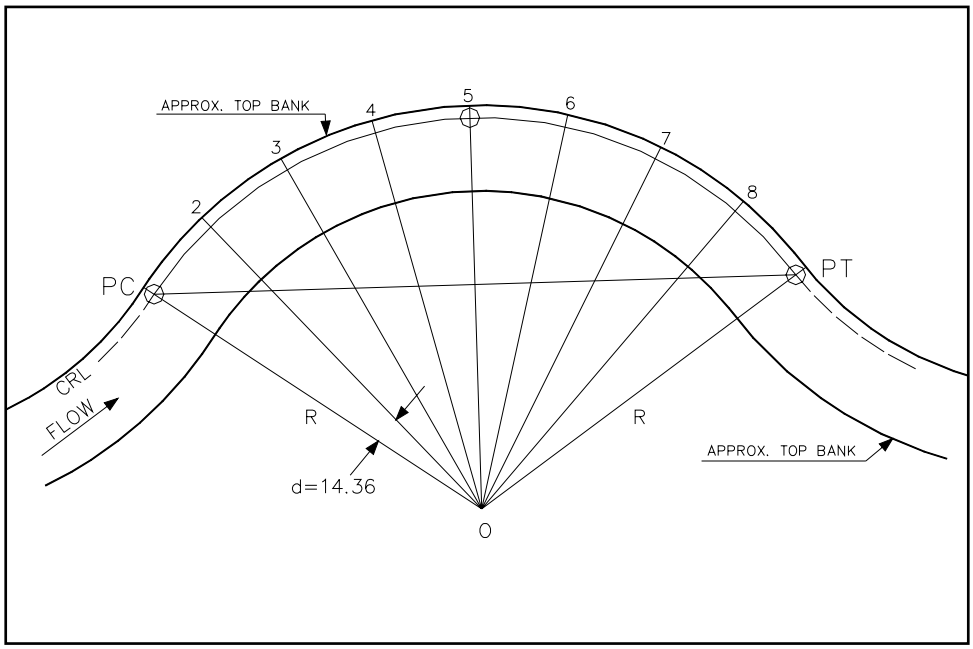

Figure 3. Typical bendway with weir spacing shown throughout bend

In this example, using a 304.8-m (1,000-ft) spacing, the bendway would allow more than five weirs to be installed. However, this example only uses five weirs for this particular bendway.

g. The center line of the weirs can be established using lines 3 through 7, (Figure 3). The center line of the weir is a straight line drawn from the intersection point of line 5 and the *CRL* using an azimuth and distance. The spacing lines must have been drawn beginning from the ordinate and drawing them outward, if not the azimuth will be wrong. Determine the azimuth of the center line of the weir by adding 180 deg to the azimuth of line 5, and then add the selected rotation angle to the line to orient the weir upstream into the current. A rotation angle of 20 deg was selected for this installation. Once the azimuth of the weir center line is known, the center line may be drawn from the intersection point of the *CRL* using the weir

length and azimuth, see Figure 4. Using lines 3-4-6-7 and repeating the previous procedure the center line of the remaining four weirs can be drawn.

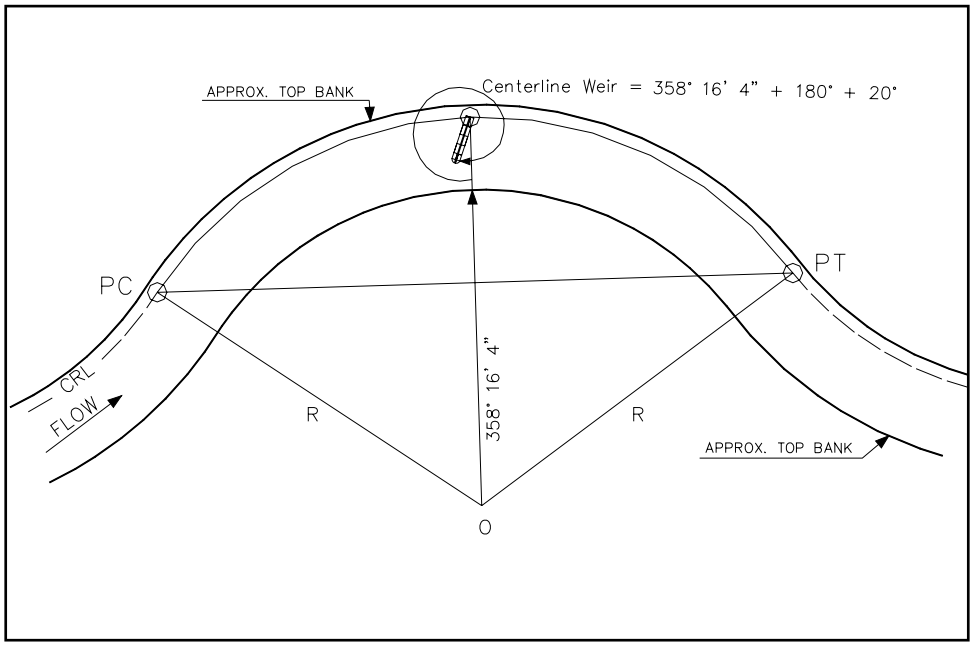

Figure 4. Typical bendway showing weir offset from point of intersection

SUMMARY: This standardized, mathematical approach for layout of bendway weirs will provide a consistent way of defining the angle and spacing of bendway weirs. Research will continue to develop guidance in selecting the spacing, number, and angle for bendway weirs based on radius of bend, degree of bend, maximum velocity of currents, width of channel, and the design size tow.

POINT OF CONTACT: For more information contact Mr. Michael Winkler at (601)634-2652; e-mail: Michael.F.Winkler@erdc.usace.army.mil

NOTE: *The contents of this technical note are not to be used for advertising, publication, or promotional purposes. Citation of trade names does not constitute an official endorsement or approval of the use of such products.*