construction
engineering
research
laboratory

TECHNICAL REPORT M-81
April 1974
Structures on Expansive Soils

STRUCTURES ON EXPANSIVE SOILS

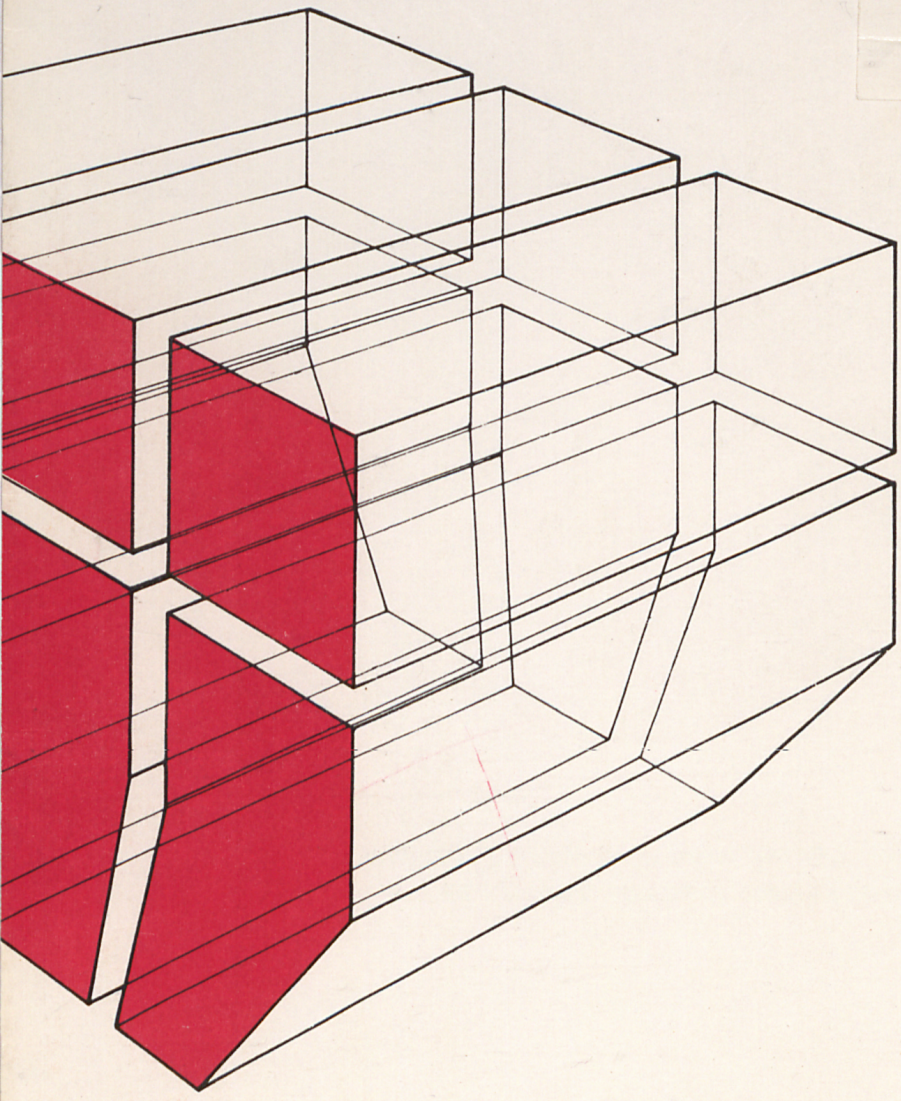

by
W. P. Jobes
W. R. Stroman

UNCLASSIFIED

SECURITY CLASSIFICATION OF THIS PAGE (When Data Entered)

REPORT DOCUMENTATION PAGE		READ INSTRUCTIONS BEFORE COMPLETING FORM
1. REPORT NUMBER CERL-TR-M-81	2. GOVT ACCESSION NO.	3. RECIPIENT'S CATALOG NUMBER
4. TITLE (and Subtitle) STRUCTURES ON EXPANSIVE SOILS		5. TYPE OF REPORT & PERIOD COVERED FINAL REPORT
		6. PERFORMING ORG. REPORT NUMBER
7. AUTHOR(s) W. P. Jobes W. R. Stroman		8. CONTRACT OR GRANT NUMBER(s)
9. PERFORMING ORGANIZATION NAME AND ADDRESS CONSTRUCTION ENGINEERING RESEARCH LABORATORY P.O. Box 4005 Champaign, Illinois 61820		10. PROGRAM ELEMENT, PROJECT, TASK AREA & WORK UNIT NUMBERS ADM78012A0K1-02-202
11. CONTROLLING OFFICE NAME AND ADDRESS		12. REPORT DATE April 1974
		13. NUMBER OF PAGES 56
14. MONITORING AGENCY NAME & ADDRESS(if different from Controlling Office)		15. SECURITY CLASS. (of this report) Unclassified
		15a. DECLASSIFICATION/DOWNGRADING SCHEDULE

16. DISTRIBUTION STATEMENT (of this Report)

Approved for public release; distribution unlimited.

17. DISTRIBUTION STATEMENT (of the abstract entered in Block 20, if different from Report)

18. SUPPLEMENTARY NOTES

19. KEY WORDS (Continue on reverse side if necessary and identify by block number)

expansive soil
structural foundations

20. ABSTRACT (Continue on reverse side if necessary and identify by block number)

The purpose of this project was to establish reasonable criteria for the successful design of structures in expansive soils areas. Damage to foundations and superstructures caused by expansion of soil is discussed. The importance of preventing infiltration of water into the soil beneath and around foundations is emphasized, and means of preventing this infiltration are discussed. Design of details of the various parts of

DD FORM 1 JAN 73 1473 EDITION OF 1 NOV 65 IS OBSOLETE

UNCLASSIFIED

SECURITY CLASSIFICATION OF THIS PAGE (When Data Entered)

Block 20 continued.

foundations and superstructures is reviewed, and recommendations are made concerning practices to be followed. Inspection of the construction to insure compliance with the intent of the design is critical if the structure is to remain sound.

FOREWORD

This project was performed by the U.S. Army Engineer Division, Southwestern, for the U.S. Army Construction Engineering Research Laboratory (CERL), under Project 4DM78012AOK1, "Engineering Criteria for Design and Construction," Task 02, "Applications Engineering," Work Unit 202, "Structures on Expansive Soils." The Technical Monitor was Mr. W. A. Heitmann of the Directorate of Military Construction, Office of the Chief of Engineers.

This project was accomplished from May-September 1971. This report was prepared by W. P. Jobes and W. R. Stroman of the U.S. Army Engineer District, Fort Worth, and by personnel from the U.S. Army Engineer Division, Southwestern. The work was accomplished under the supervision of Dr. J. D. Prendergast, Structural Mechanics Branch, CERL.

Dr. L. R. Shaffer is Director of CERL.

CONTENTS

DD 1473 1
FOREWORD 3
LIST OF FIGURES 5

1 INTRODUCTION 7
Purpose
Types of Distress in Structures Caused by Expansive Soils
Design Methods and Criteria

2 FOUNDATION ANALYSIS 7
Introduction
Recognition of Problem
Review of Existing Design Practices
Moisture Availability
Development of Design Data
Typical Subsurface Profiles
Influence of Water Tables
Evaluation of Expansion Potential
Choice of Foundation Type
Design of Foundations
Construction Procedures
Postconstruction Maintenance

3 SUPERSTRUCTURE DESIGN 19
General
Superstructure Selection and Design
Basements

4 STRUCTURAL FOUNDATION DESIGN 20
Concrete
Grade Beam Design
Supported Slabs
Grade Beams Under All Masonry Walls
Corner Reinforcing
Foundation Notes
Plinths
Drilled Pier Design
Stoops
Building Slab on Grade Design
Ribbed Mat Foundation
Heavy Mats

5 GRADING AND DRAINAGE 39
6 BENCH MARKS 42
7 UTILITIES 42
8 LANDSCAPING 44
9 INSPECTION 44
10 EXCEPTIONS 44
11 CONCLUSION 44
APPENDIX 45
REFERENCES 53
DISTRIBUTION

FIGURES

Number		Page
1	Perched Water Table	10
2	Typical Subsurface Profile	12
3	Drilled Pier Detail	15
4	Typical Construction Procedures for Pier Shaft	16
5	Wall Ties to Concrete Beams	21
6	Wall Ties to Concrete Column	22
7	Wall Ties to Steel Column	23
8	Wall Ties to Steel Column	24
9	Wall Ties to Steel Beam	25
10	Wall Connections with Control Joints	26
11	Typical Details of Interior Partitions	27
12	Special Control Joint Detail	28
13	Typical Grade Beam Reinforcing Diagram	29
14	Typical Exterior and Interior Grade Beams	30
15	Typical Grade Beam Void Details	31
16	Typical Bar Joist First Floor Framing	33
17	Typical Cast-In-Place or Precast Concrete Grade Beam with Steel Bar Joist Floor Framing	34
18	Foundation Notes	35
19	Typical Supported Stoop	36
20	Typical Articulated Stoop	37
21	Contraction Joint Detail	38
22	Typical Ribbed Mat Slab Foundation	40
23	Optional Construction Details of Exterior Beams for Ribbed Mat Construction	41

24 Slab On Grade Construction Joint 42

25 Bench Mark Detail 43

26 Method of Analysis 47

27 Uplift Force on Pier Shafts in the Midway Formation 48

28 Uplift Force on Pier Shafts in the Navarro Formation 49

29 Total Tension Load vs. Depth, Pier No. 1, Lackland Air Force Base 50

30 Total Tension Load vs. Depth, Pier No. 2, Lackland Air Force Base 51

31 Base Pressure Uplift 52

STRUCTURES ON EXPANSIVE SOILS

1 INTRODUCTION

Purpose. The purpose of this report is to establish reasonable criteria for the successful design of structures in expansive soils areas. For many years, the Corps of Engineers has experienced structural cracking of beams, piers, plinths, and walls in some of the buildings which have been constructed on expansive soils. Although architect-engineer firms have used various approaches in attempting to design and construct buildings successfully in these areas, their efforts have met with only limited success. Most of the criteria contained in this study have been developed during the last few years by the Corps of Engineers and are based on many laboratory and field tests and studies of building case histories. The criteria appear to be satisfactory in that buildings are now being successfully designed in areas where formerly the majority of buildings constructed had some deficiencies attributable to expansive soils action.

Types of Distress in Structures Caused by Expansive Soils. Structural distress in buildings caused by expansive soils is usually composed of the following:

A. Heaving of floor slabs constructed on-grade. This is caused by expansion of either the overburden foundation soil or deeper foundation materials, or both.
B. Cracks in grade beams. Where voids under beams are not provided, expansive overburden foundation soils can exert enough pressure on the bottom of beams to crack the beam and even cause complete failure.
C. Cracks in walls. This is usually the result of differential foundation movement and rigid walls.
D. Cracks in pier shafts. This can be caused by expansion of materials through which the insufficiently reinforced pier shafts pass. An upward force is exerted on the pier shaft by skin friction developed by the surrounding expansive soils. The tension thus induced in the piers, cracks the pier shafts.
E. Concrete plinth failure. This is caused by upward forces on the pier shaft and by differential movement of adjacent piers inducing excessive moment and axial load in the plinths.
F. Failure symptoms similar to the above can also be caused by expansion and contraction of the building frame, particularly when subjected to a rapid drop in temperature as happens frequently in the mid-western part of the United States. In any case, stresses and movements caused by contraction and expansion may be in addition to those caused by expansive soils movements.

The above expansive soils problems are caused by moisture gains or depletions in relation to the materials beneath the building in one or more of the following ways:

A. Broken water, sewer, or roof drain lines. (Many times these lines are broken by expansive soils movement.)
B. Surface drainage directed toward the building.
C. Heavy rains during construction which fill pier shafts or saturate the building area.
D. Utility trenches which direct water toward the building.
E. Subsurface water trapped under the building by a basement (caused by tapping a subsurface water bearing layer and damming the flow).
F. Leaking cooling towers.
G. Excessive watering of grass and shrubs next to the building.
H. Exposure of bearing surface materials to severe drying effects.
I. Removal of restraining loads by basement construction or site grading.

Design Methods and Criteria. Design methods and criteria to be used and factors to be considered in overcoming or preventing the above problems are discussed in subsequent chapters.

2 FOUNDATION ANALYSIS

Introduction. Designing foundations in expansive soils areas is often unique in that the very soil properties generally most sought after are those which may give rise to the most severe problems. High shear strength, low void ratios, and low pore-pressure response to applied loads are qualities which usually indicate stable foundation materials. However, these properties, coupled with certain clay mineral constituents, may be trouble indicators to foundation engineers designing in expansive soil areas. Identification tests show that the expansive

clay minerals are usually one (or more) minerals of the montmorillonoid group. For practical purposes, it is not entirely necessary to establish which one of the montmorillonites is present. Simple laboratory tests can be used to establish the presence of "active" colloids, and these can form the basis of further expansive clay design investigations. The tests and procedures suggested by Skempton[1] and Seed,[2] to be performed on disturbed materials, do not reflect the in-situ conditions and will indicate neither the potential volume change nor expansion pressures. Nevertheless, they have proved to be useful tools in detecting potential expansive soil horizons.

Recognition of Problem. In areas containing a significant number of structures, the presence of expansive foundation materials will be evidenced by architectural and structural distress to the structures themselves. In addition, utility lines entering the building will be subjected to disturbances. Most of the distress evidence will be similar to the distress phenomena found in buildings that have suffered excessive differential settlement. Care should be taken to distinguish between distress due to thermal changes and that due to expansive soils movement which may be similar. A review of subsurface and foundation design data should indicate whether the distress is due to settlement or expansion. Investigations in expansive soil areas should indicate that the subsurface materials are primarily fine-grained, will slake readily in water, exhibit liquid limits in excess of 40, and have plasticity indices greater than 25. In addition, activity indices will be equal to or greater than 1.0, and the natural moisture content will range from somewhat higher than the plastic limit (if the soils are near-surface deposits and have been subjected to recent rainfall) to less than the plastic limit (if the soils are deep or have been subjected to a dry atmosphere for an appreciable period of time).

A thorough review should be made of the entire subsurface profile encountered in areas where expansive soils have caused problems. Possibly only one horizon contains expansive materials, but in some areas expansion may be detected in several separate horizons. Quite often when there is more than one horizon with expansive characteristics, the horizons are separated by nonexpansive or inert zones of varying thicknesses.

Review of Existing Design Practices. When expansive soils problems occur, there are three facets to existing design practice that should be subjected to a searching review. The investigation stage—where design data are developed—should be reanalyzed to check for all possible sources of the problem. Quite often only one expansive horizon has been recognized, and all effort is directed to eliminating problems arising from this zone. As a consequence, some other zone that might be equally as expansive is overlooked. During the design stage the engineer, having recognized that a problem exists, may approach the solution in a manner that could not succeed. By not realizing the magnitude of the physical forces confronting him, he could attempt to effect a solution by stiffening the structure, whereas the best compromise solution could be achieved by making the structure more flexible. Finally, a thorough review of construction practices should be made. Construction procedures which might result in the acceptable performance of buildings founded on stable materials could be detrimental to structures built on expansive soils. Timing and phasing of foundation construction should be reviewed. Permitting water to accumulate in excavations could start a swelling process which may continue for a considerable period of time. Introduction of pervious materials into the excavation could be another source of water which would continue to "feed" the expansive soil. In each of the three phases, two basic questions should be considered: (1) Do the design and contemplated construction take into consideration the possible effects of existing and potential sources of moisture? (2) Does the design establish the full limits of potential expansive materials and their effect on the proposed structure?

In analyzing results of laboratory tests, it should be realized that consolidation tests conducted on most expansive foundation materials in the undisturbed state, and especially those that are moisture deficient, will exhibit a high maximum past pressure. Settlement analyses and bearing capacity determiniations should take this into account. This usually results in higher allowable bearing pressures

[1]A. W. Skempton, "The Colloidal 'Activity' of Clays," *Proceedings, Third International Conference on Soil Mechanics and Foundation Engineering*, Vol 1 (Switzerland, 1953), pp 57-61.

[2]H. B. Seed, R. J. Woodward, and R. Lungren, "Clay Mineralogical Aspects of the Atterberg Limits," *Journal of the Soil Mechanics and Foundations Division*, ASCE, Vol 90, No. SM4 (July 1964), pp 107-131.

than would normally be used. Fortunately, this higher bearing pressure restrains somewhat the tendency of the foundation materials to swell.

Based on a study of foundation heave occurring in a structure built in an area with a perched water table overlying an expansive clay shale, it is thought that disruption of the pier shaft by tension allowed water from the perched water table to penetrate farther into the foundation material, thereby causing more heave.[3] Ultimately, water gained access to the bottom of the footings where the heave was applied directly to the structure. The structure ultimately heaved a maximum of approximately 5 in. It was estimated that the pier shaft, which was 30 ft deep, elongated approximately 1 in. If the integrity of the pier shaft had been maintained by sufficient reinforcing steel, water would have had less chance of penetrating the lower zones. (This assumes that movement of the pier shaft with respect to the surrounding soil allows water more chance to access around the shaft perimeter.) Analysis of potential heave indicated that as much as 3.0 percent steel (based on the cross-sectional area of the pier shaft) might be required to resist tension forces.

Moisture Availability. For a potentially expansive soil to be activated—that is, to begin swelling—a source of water is necessary. In evaluating a building site and the design of the proposed structure, it should be recognized that water may be available from a number of sources. If there is a free body of water, either transitory or permanent, within the foundation materials, the effects of construction could cause the water to become available to normally desiccated soils and cause them to swell. Removing vegetation and providing an impermeable cover within the building site, which would reduce transpiration and evaporation, will give more water access to near-surface soils. Also, if a perched water table underlies the site, then excavation through and below the perched water may give it access to a moisture-deficient zone lying below. Surface water draining under the building, leaking roof drains and other storm drains, water lines, sewer lines, and communication conduits could also provide a water source. Leaks from air conditioning cooling towers have been known to contribute enough water to activate a swelling soil foundation. Small leaks, which might otherwise go unnoticed, could cause enough heaving to create a major disruption in a conduit, and a larger quantity of water to the foundation, and thereby cause a larger amount of heave of the foundation to take place. Consequently, each potential source of water should be recognized during the design phase, and solutions to take care of the anticipated problem should be incorporated into the construction and maintenance plans.

Development of Design Data. In developing data with which to design the structure, the foundation engineer can recognize potential problem areas during the field investigation stage. Shrinkage cracks will be noticeable in dry periods where the partially expansive soils extend to the ground surface. Undisturbed samples of the subsurface materials will show evidence of jointing, slickensides, or fissures. In some materials, these discontinuities may not be discernible to the eye, but radiography will disclose their presence.[4] Each soil horizon should be examined for potential expansive characteristics. Where exploration is accomplished on a regular basis, test results should be examined for seasonal moisture variation. If no past records exist, then an effort should be made to obtain samples during both wet and dry periods. Variation in moisture content can extend to a considerable depth, as noted by Parcher and Means.[5] Natural ground water levels should be determined during field explorations. If casing is used in the exploratory holes, the water level should be determined with and without the casing in the hole. Ground water profiles should be further established by installing simple, open well-point types of piezometers. If it is suspected that the water level does not conform to a natural hydrostatic profile, piezometers should be set with the intake points at different levels so the profile can be established, as shown in Figure 1.

Laboratory testing should be directed not only to developing the supporting capacity of the foundation materials, as usually required, but also to determining the propensity of the material to swell and dislocate the superimposed structure to the extent that

[3] *Building Foundations in Expansive Clays,* Vols 1 and 2 (U.S. Army Engineer District, Fort Worth, April 1968).

[4] W. Heley and B. N. MacIver, *Engineering Properties of Clay Shales,* Report 1, Development of Classification Indexes for Clay Shales, Technical Report S-71-6 (U.S. Army Engineers Waterways Experiment Station, June 1971).

[5] J. V. Parcher and R. E. Means, *Soil Mechanics and Foundations* (Charles E. Merrill Publishing Co., 1968).

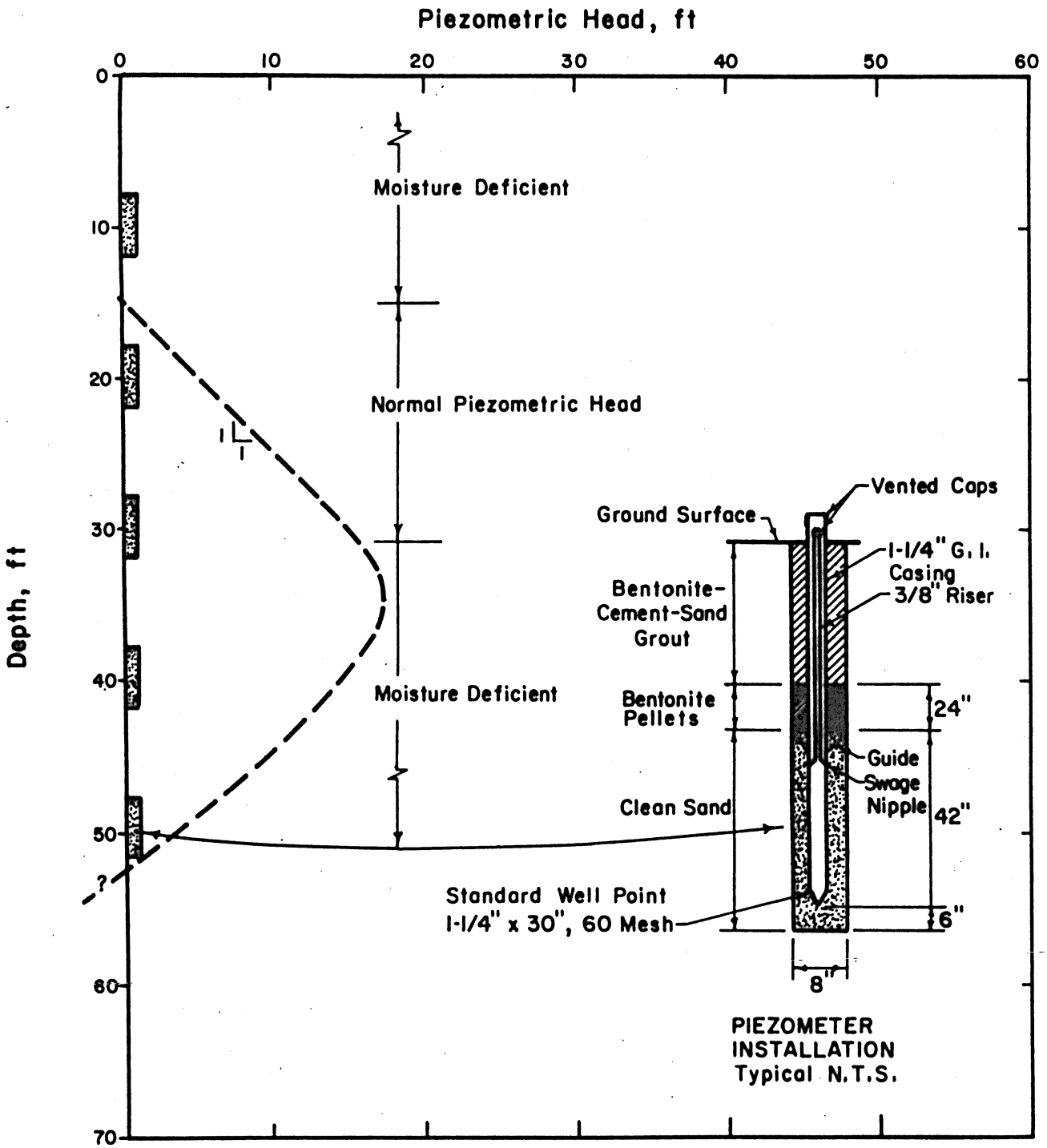

Figure 1. Perched water table.

the structure does not perform in an acceptable manner. Consequently, tests should include those capable of identifying materials with active characteristics, such as liquid limit, plastic limit, and grain-size analyses. Shear strength and expansion-consolidation tests should be conducted so that the amount of heave under overburden and other superimposed loads can be predicted. If deep piling or drilled and underreamed piers are to be used to support the structure, it will be necessary to evaluate the adhesion between the piling shaft and the surrounding soil. Several methods applying various testing procedures have been used to predict the amount of swelling pressure and volume change that might be experienced.[6] Adhesion or negative skin friction developed between a pile shaft and the surrounding soil has been the subject of recent investigations conducted by the Corps of Engineers, Fort Worth District, and the Center for Highway Research, The University of Texas.[7,8] Values derived from these tests are related to quick shear strength, as exhibited by unconfined compression tests, and to residual shear strength determined by repeated direct shear tests.

Typical Subsurface Profiles. To keep the discussion of foundations in expansive clays within manageable terms, the myriad forms which near-surface earth deposits may assume have been reduced to three simple subsurface profiles, as shown in Figure 2. For purposes of discussion, subsurface materials can be divided into "overburden" and "primary geologic formation." Overburden is considered to be either that portion of the subsurface material that has been transported to its present location and cannot be identified as belonging to any particular geologic period other than "Recent," or the portion of the underlying parent geologic formation that has been so highly weathered and altered that little, if any, of the original structural characteristics remain in evidence. The primary geologic formation is that portion of the subsurface material which can be identified as belonging to a recognized geologic formation and is undisturbed except for some weathering and altering; i.e., a recognizable portion of the effects of the material's geologic history remains in evidence. Obviously, in some cases where the overburden soils are residual, the line of demarcation may be very blurred, and the change in characteristics between overburden and primary geologic material may be gradational. In other areas, especially where the overburden soils are not residual, the change in characteristics may be sharp and well defined. The designer must realize that strata from either or both overburden and primary material may be expansive. Examples of expansive primary materials are shales, clay shales, and some siltstones. Typical profiles of the various conditions that might be found in an "active" clay shale have been described by Bjerrum.[9]

Influence of Water Table. The presence and condition of ground water and the depth of seasonal moisture change should influence the selection of the type of foundation to be used. Parcher and Means[10] developed procedures whereby the influence of seasonal moisture change on mat foundations can be estimated. The estimate is based on the duration of drought and the plasticity characteristics of the foundation materials. Individual footings, either dug and formed or drilled and underreamed, should not be founded in an expansive soil that lies within the zone in which seasonal moisture changes occur. With proper design and construction practices, footings can be located in expansive clays lying below the zone of seasonal moisture change. This will be discussed in a later chapter.

The presence of a perched or transient water table presents the most severe test to good foundation design. A perched water table can be defined as a zone exhibiting gravitationally free moisture lying above a zone that is moisture deficient. This condition is quite prevalent where a layer of granular soil overlies a clay having a high electric potential such as

[6]J. E. Jennings, "The Prediction of Amount and Rate of Heave Likely to be Experienced in Engineering Construction on Expansive Soils," *Proceeding, Second International Conference on Expansive Soils* (Texas A&M University, 1973), and R. A. Sullivan and B. McClelland, "Predicting Heave of Buildings on Unsaturated Clays," *Proceedings, Second International Conference on Expansive Soils* (Texas A&M University, 1973).

[7]J. W. Chuang and L. C. Reese, *Studies of Shearing Resistance Between Cement Mortar and Soil* (Center for Highway Research, The University of Texas at Austin, May 1969).

[8]*Building Foundations in Expansive Clays,* Vols 1 and 2 (U.S. Army Engineer District, Fort Worth, April 1968).

[9]L. Bjerrum, "Progressive Failure in Slopes of Overconsolidated Plastic Clay and Clay Shales," *Journal of Soil Mechanics and Foundations Division,* ASCE, Vol 93, No. SM5 (September 1967), pp 1-50.

[10]J. V. Parcher and R. E. Means, *Soil Mechanics and Foundations* (Charles E. Merrill Publishing Co., 1968).

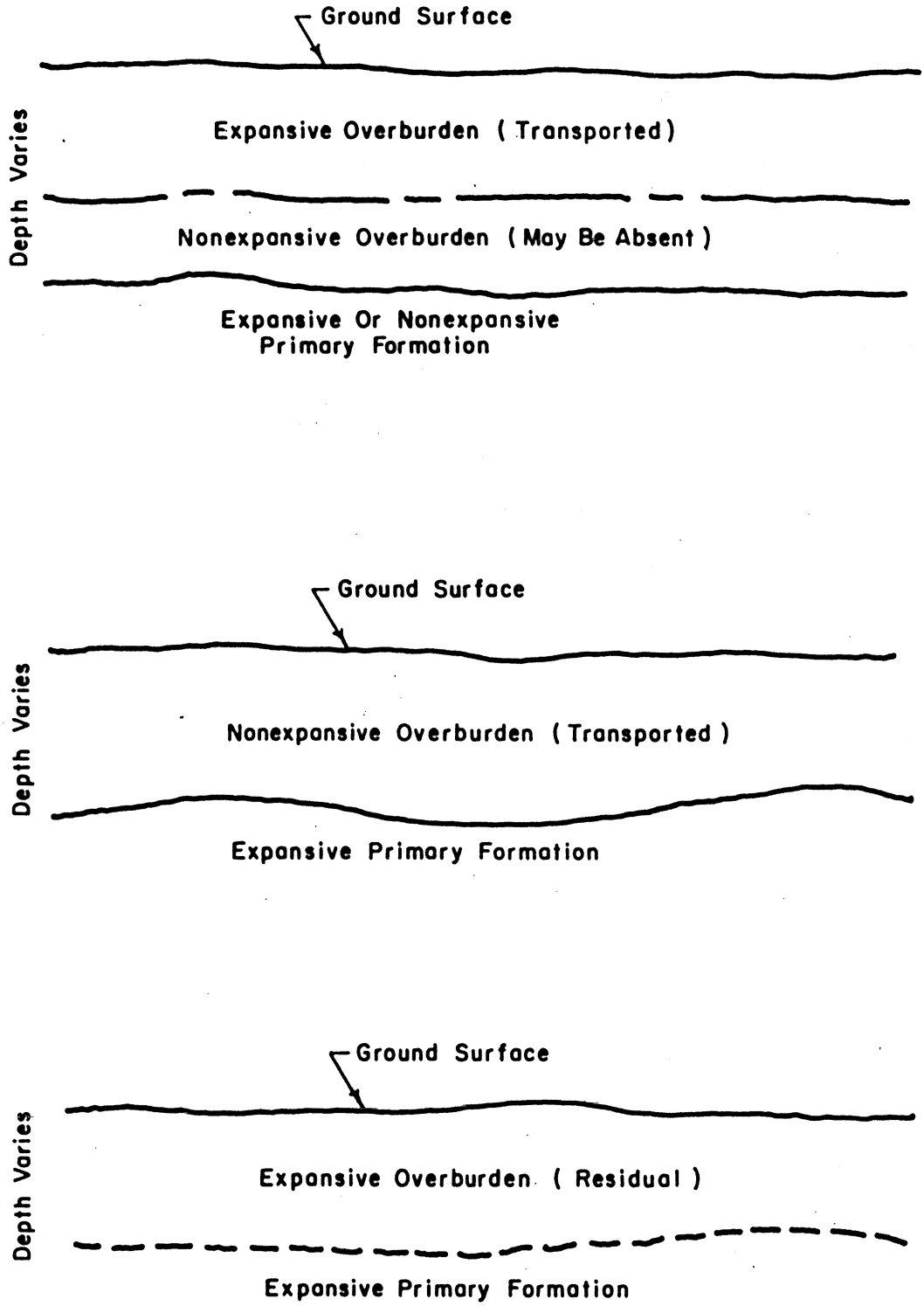

Figure 2. Typical subsurface profiles in expansive soil areas.

that exhibited by most expansive soils. The "immobilized" layer of water surrounding soil particles might be large enough to effectively block the path of any potential gravitational water flowing into the lower zones.[11] As a consequence, an upper zone of the clay underlying the perched water could be saturated and moisture satisfied while a lower zone of the clay would remain moisture deficient. A typical hydrostatic profile of a perched water table is shown in Figure 1. In such cases, foundations constructed and carried through and below this moisture-satisfied zone should be undertaken only when all of the potential expansive forces are known and accounted for.

Surface or subsurface drains to prevent free water from entering a moisture-deficient expansive clay are usually self-defeating. The absorption forces of the clay, being stronger than gravitational forces, will cause the soil to absorb water until an equilibrium condition is reached. Only then can water be withdrawn by gravity drains but, depending on the thickness of the zone of equilibrium, enough swelling to cause damage to the building may already have occurred.

Evaluation of Expansion Potential. The existing literature contains numerous methods for estimating expansion pressures and predicting the amount of heave that might be experienced in a given soil under various load conditions.[12] It should be recognized that, for spot footings, download alone cannot be utilized to resist all of the heave that might occur below the bottom of a footing if an adequate safety factor against failure in shear is to be maintained. Less effort has been directed toward evaluating the effect of a negative skin friction on pile shafts on lifting the supported structure. Reese and Chuang[13] report results of tests conducted on a cast-in-place reinforced concrete pier to evaluate the positive effect of skin friction. Results of the tests were related to the quick shear strength of the soil in which the pier was embedded. However, in a swelling soil, the lateral pressure developed could exceed the pressure that would be developed by normal soils. Ranganatham indicates that the lateral pressure on a retaining wall having expansive soil backfill is more or less limited by the passive earth pressure coefficient.[14] The shear strength of the soil-shaft interface could be likened to the shear strength developed by direct shear tests conducted on presplit specimens, as conducted by U.S. Army Engineer Division Laboratory, Southwestern.[15] This is because, in drilling the hole in which the foundation concrete is cast, the auger disturbs and reworks a ⅛- to ¼-in-thick layer of soil around the bore hole annulus. Obviously, when swelling first begins, the deeply negative pore pressure existing in the soil precludes the use of "drained" shear strengths to compute the passive earth pressure; that is, shear strengths which are based on pore pressures equal to zero. However, at some point in time, when swelling has proceeded to near the end point, the use of drained direct shear tests to determine passive pressures does give creditable results. The Appendix shows the results of field tests conducted at Lackland Air Force Base[16] plotted against a mathematical determination of negative skin friction.

Generally, design of shallow foundations needs be concerned only with the maximum swell pressure that might be developed and the total amount of heave under the sustained load for the material lying below the bottom of the footings or first-floor system. This is because skin friction, as such, contributes an insignificant part to the total force. On the other hand, design of deep foundations should recognize not only the forces acting below the bottom of the footings, but also the forces acting along the sides of deep foundation walls and footing shafts.

Choice of Foundation Type. The tentative choice

[11] R. M. Young and B. P. Warkentin, *Introduction to Soil Behavior* (The Macmillan Company, 1966), p 279ff.

[12] J. E. Jennings, "The Prediction of Amount and Rate of Heave Likely to be Experienced in Engineering Construction on Expansive Soils," and R. A. Sullivan and B. McClelland, "Predicting Heave of Buildings on Unsaturated Clays," *Proceedings, Second International Conference on Expansive Soils* (Texas A&M University, 1973).

[13] J. W. Chuang and L. C. Reese, *Studies of Shearing Resistance Between Cement Mortar and Soil* (Center for Highway Research, The University of Texas at Austin, May 1969).

[14] B. V. Ranganatham and B. Satyanarayana, "A Rational Method of Predicting Swelling Potential for Compacted Expansive Clays," *Proceedings, Sixth International Conference on Soil Mechanics and Foundation Engineering*, Vol 1 (Toronto, 1965), pp 92-96.

[15] W. Heley and B. N. MacIver, *Engineering Properties of Clay Shales*, Report 1, Development of Classification Indexes for Clay Shales, Technical Report S-71-6 (U.S. Army Engineers Waterways Experiment Station, June 1971).

[16] *Building Foundations in Expansive Clays*, Vols 1 and 2 (U.S. Army Engineer District, Fort Worth, April 1968).

of a foundation system is usually made early in the design stage. First, the choice is usually based on structural and architectural requirements and is an extension of such features as function of the structure, required height of floor above grade, building height, type of framing, span between frame or columns, and column loads. Second, the foundation system is adjusted as dictated by such site features as drainage and surface topography. Then the foundation design is further revised, if necessary, to take into account subsurface features such as soft zones, depth to bearing stratum, depth to ground water, and construction feasibility. Ideally, the foundation choice should be based on the type that will best perform at a given site within reasonable cost. For the purpose of this discussion, foundations for buildings in expansive clay areas are divided into three major categories as follows:

Mat or Slab Foundation. This type of foundation normally consists of a reinforced concrete floor slab supported by compacted fill and stiffened by reinforced beams cast monolithically with the slab. Masonry buildings of regular outline having load-bearing walls or with moderate to small column loads are particularly adaptable to this type of foundation as are pre-engineered metal structures. Mat foundations are more appropriate for use where the first floor is at or near outside finished grade, but they can also be used for buildings with the first floor at dock height. Generally, this selection may be made for areas that have expansive materials extending continuously from the ground surface to any reasonable foundation depth. It is particularly suitable for areas that have expansive materials beginning a few feet below ground surface and extending to considerable depth.

Shallow Foundations. Shallow foundations include continuous wall and individual spot spread footings. Usually this type of foundation is suitable only where a stable stratum is located within a few feet of the ground surface. Buildings supported by shallow foundations, particularly when their framing system is semirigid, are very susceptible to lateral and vertical foundation movements. In contrast to mat foundations, distress appears in the structure after a seemingly small amount of movement has taken place.

Deep Foundations. The combination of three conditions points to the use of deep foundations: (a) absence of a shallow, stable founding stratum, (b) framing system and structural loads which result in moderate to high column loads, and (c) building configuration and functional requirements or economics which preclude the use of a mat foundation. To obtain an economical foundation when these conditions prevail usually results in carrying the footings to some depth below the ground surface. The most common practice in the southwestern portion of the United States is to install drilled and underreamed, cast-in-place, reinforced concrete piers. The excavation for the pier shaft is dug by a machine-operated auger. The bell may be formed by hand, an underreaming tool, or a combination of both. Details of a typical pier shaft are shown in Figure 3 and photographs of construction procedures are shown in Figure 4.

Design of Foundations. The first consideration in the design of any foundation is the safety of the supported structure against shear failure or failure through excessive settlement caused by consolidation of the foundation materials. But the designer should be cautioned against the use of extreme conservatism in designing against failure in shear or settlement because he then enacts a penalty against the safety of the structure in upheaval. In computing bearing pressures, a realistic approach can provide an adequate factor of safety against shear failure and provide for a tolerable amount of settlement during normal conditions and yet give the structure added stability during heaving conditions.

Deep-drilled and underreamed piers should be designed not only to carry the compressive structural download but also to resist the tensional load resulting from heave. This is true both for piers extending through an expansive zone and piers embedded completely within an expansive material. Generally, in expansive soil areas, drilled and underreamed piers are designed for end bearing alone. During periods of drought, the soil will shrink away from the sides of the shaft to some depth below the ground surface. Consequently, the shaft will lose that supporting capacity of the soil. Unless the shaft penetrates some distance into a stable, inactive material, side friction should not be relied upon to provide continuous support for downloads. However, side friction will be available along the entire length of the shaft embedded in the heaving stratum during wetting conditions. Hence, the shaft should be designed to resist tensional forces. The amount of

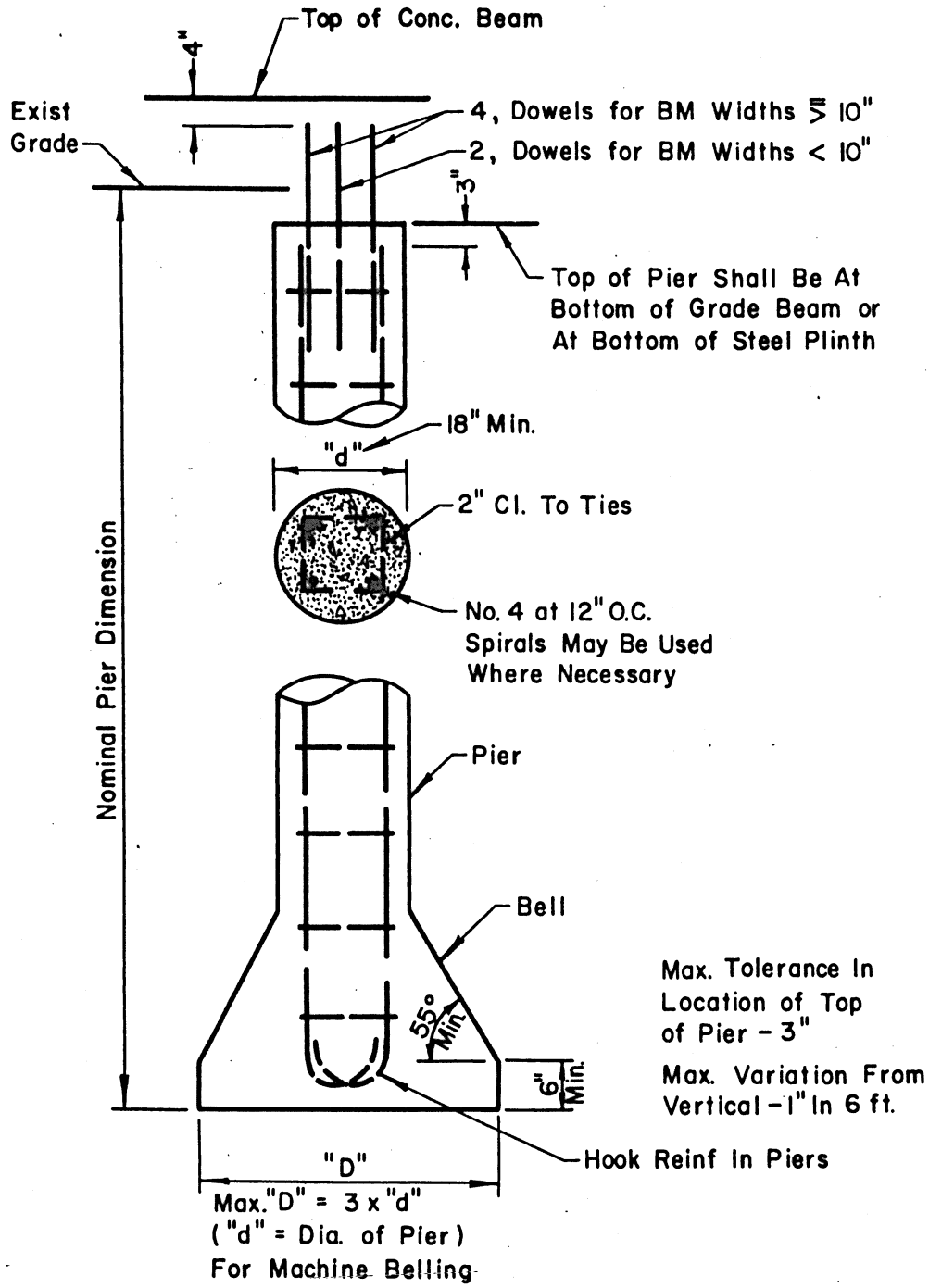

Pier Design

1. Use 3000 psi Concrete In Drilled Piers
2. Assume Pier As A Short Tied Col.
3. Min. A_S = 0.01 A_G Usually. More May Be Req'd
4. Keep Bell Sizes In Increments of 6" (Such As 3'-0"ϕ, 3'-6"ϕ, etc.)
5. Vert. Reinf. In Piers To Be ASTM A615 Grade 60.

Figure 3. Drilled pier detail.

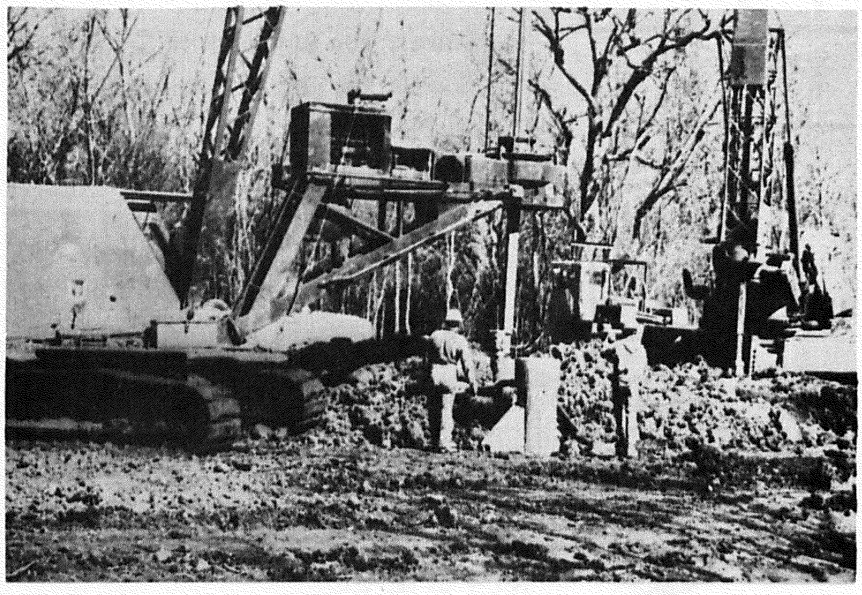

(a) Drilling foundation pier hole.

(b) Underreaming tool.

Figure 4. Typical construction procedures for pier shaft.

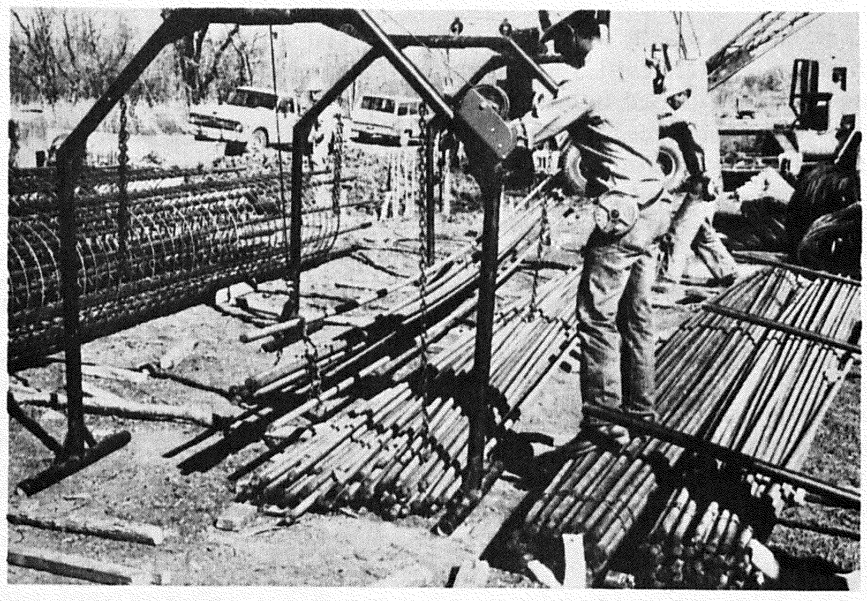

(c) Reinforcing cage manufacturing.

(d) Foundation completed to grade.

Figure 4. Typical construction procedures for pier shaft (cont'd.).

resisting force available is usually considered to be the dead load of the structure carried by the shaft plus the tensile resistance derived from reinforcing steel in the shaft. It should be noted that the amount of tension varies as the surface area of the pier shaft is increased or decreased. Consequently, the shaft should be kept as small as possible, consonant with structural requirements and the requirements of clean-out, down-hole inspection, and underream sizes. The ability of the underream piers to resist tension forces should be verified,[17] and the reinforcing bars should be hooked if dictated by embedment requirements. The design of the concrete used to construct the footings should result in a high-density, low-permeability mass, and one which will not create voids between the shaft and the annulus.

Shallow foundations, either mat or individual footing types, may follow either of two design concepts, depending on site conditions and economics. If the expansive materials are represented by a relatively thin, near-surface stratum, it could be advantageous to remove and replace the expansive material with nonexpansive material. Then a normal foundation design can be utilized. If the expansive zone is thick, then either a mat such as described by Parcher and Means[18] or individual footings can be used. If individual footings are used, they either must be placed deep enough or the material beneath the footings must be replaced with sufficient nonexpansive material so that the sum of the residual shrinking plus swelling does not exceed that which the structure can tolerate. Both shrinking and swelling must be considered because both phenomena may occur simultaneously at different, but adjacent, locations in the structure.

Construction Procedures. Insofar as possible, foundation construction in expansive soil areas should be done in the dry. If water is inadvertently allowed to come in contact with an expansive soil, it should be removed as quickly as possible, and all material which has imbibed water should also be removed from the foundation before construction proceeds. Excavations that will be open for a period of time, such as basement or swimming pool excavations, should be protected from drying by a concrete mud slab on the bottom and gunnite or other impervious membranes on the sides.

The following paragraph should be included in the specifications on the projects having drilled piers:

> *Drilled footings:* The Contractor shall drill the holes for concrete piers and footings as indicated on the drawings. The holes shall be drilled straight, plumb, and to the depths as indicated on the drawings. Where, in the opinion of the Contracting Officer, crumbling or caving in of pier hole walls or inflow of ground water is likely, casings shall be required. In the event that casing of pier holes is required, the casings may, at the Contractor's option, be abandoned provided no extra expense to the Government is involved, or it may be removed in lifts as each lift of concrete is placed, in such a manner that the bottom of the casing will at all times be below the top of the concrete being placed, until the top of the concrete is above all unstable earth strata. All concrete for the pier shall be placed within 2 hours after excavation of the pier shaft and bell is completed. Pier holes shall be protected from inflow of surface and ground water. Pier holes shall not be started during inclement weather nor when weather conditions would not permit the completion of the hole and placement of concrete within the specified 2-hour period. Should water inadvertently enter a pier hole, the hole shall be cleaned out and, if necessary, deepened to undisturbed material. Drilled piers shall be underreamed as shown on the drawings. Concrete for drilled piers shall be class A concrete conforming to the SECTION: CONCRETE. Care shall be taken in setting the reinforcement in the pier shafts. All concrete shall be vibrated."

To prevent surface or near-surface water from finding access to a lower, expansive zone, it is important that the concrete in the piers be densified by vibrating. This provides close contact between the concrete mass and the walls of the hole. The construction inspector should not allow holes of larger diameter than those called for in the drawings unless the amount of reinforcing steel in the shaft is increased. Also, drilling of oversized holes, where casing is required, and filling the annular space between the casing and the walls of the hole with pea gravel, vermiculite, or other porous material should not be permitted. The pier holes should be constructed in a manner that will change the moisture environment as little as possible.

Postconstruction Maintenance. A well-planned and faithfully executed maintenance program should be required during the life of structures

[17] J. L. Jasper and V. W. Shtenko, "Foundation Anchor Piles in Clay Shales," *Canadian Geotechnical Journal*, Vol 6, No. 2 (1969), pp 159-174.

[18] J. V. Parcher and R. E. Means, *Soil Mechanics and Foundations* (Charles E. Merrill Publishing Co., 1968).

founded on or in expansive soil materials. Any cracks appearing in walls and grade beams should be noted and measured periodically to determine if distress is increasing. The integrity of water, sewage, and storm drain lines should be verified periodically, and any leaks should be promptly repaired. Grading around the structure should be maintained so that rain-water is carried away from the structure. Crawl spaces should be inspected for any evidences of inflow of water and the situation causing the inflow should be corrected.

3 SUPERSTRUCTURE DESIGN

General. In some expansive soils areas it is almost impossible to design a foundation which will not move. In other areas, because of the presence of a stable or moisture-satisfied material, a simple economical foundation can be designed. When excessive differential movement is anticipated, it becomes necessary to provide for distress relieving materials and features in the design of the structure.

Designing around large movements of the foundation by installing elaborate mechanisms cannot be justified economically nor can normally available installations maintenance personnel be expected to operate built-in devices such as leveling jacks.

The type of building foundation may need to be selected prior to selecting the type of superstructure framing since this may affect the amount of foundation movement to be expected. A deep drilled pier foundation into expansive clay shales would be expected to produce considerable movement thus requiring a more flexible frame. A ribbed mat slab or a prepared foundation would be expected to have little differential movement, and other types of construction, load bearing, or concrete frame could be considered. The size and height of the building, of course, have considerable bearing on the type of foundation provided. A mat slab foundation for an irregular building would not be appropriate unless loads were small, such as for family housing. Items which could be affected by movement such as framing systems, walls and partitions, wall and floor finishes, connections to the foundation, roof decks, and others should be studied to determine which are best suited for the type of foundation required.

Superstructure Selection and Design.

Metal Buildings. Metal buildings of the prefabricated, pre-engineered type should be considered where practical, even for types of buildings where metal is not normally considered. All shops, warehouses, hangars, and storage buildings should be metal where criteria will allow. These buildings can take considerable differential movement without noticeable damage, and normally can be placed on an economical ribbed mat foundation. Metal buildings can be made architecturally acceptable with a little design effort.

One- and Two-Story Buildings.

A. Steel framing. Where the main building is founded in or on expansive soils, a flexible framing system should be used. A steel frame with a floor system consisting of lightweight concrete over metal forms, supported by bar joists and steel beams, is usually the best and most economical way to obtain this flexibility; it will provide a building capable of accommodating considerable differential movements without noticeable damage.
B. Precast concrete framing. Where economical, precast concrete can be considered, provided beam-to-column connections and precast roof and floor joists to beam connections can be made reasonably flexible by use of neoprene pads, etc. This type of framing is not as flexible as steel framing.
C. Loadbearing wall buildings. Steel joists bearing on precast concrete walls would be considered flexible construction, and acceptable. Precast concrete joists bearing on precast concrete walls (separated by neoprene pads) would have some flexibility and should be considered, where economical. Where the foundation is a ribbed mat slab, little differential movement would be expected, and any economical type of bearing wall construction would be acceptable. Load bearing masonry walls should be constructed in sections with strip windows or metal panels between masonry sections or comparable breaks to provide relatively short lengths of wall panels.

Multistory Buildings. Multistory buildings should have steel frames if the foundation is placed on or into expansive material where considerable movement might be expected. Steel framing systems should be as flexible as the design will allow. Beam-to-column connections should be rigid enough to take wind and other loads but should allow for distortion due to foundation movement. Bolted connections should be used where possible. Concrete framing systems can be used when the footings can be

anchored into a stable moisture-satisfied material, where the foundation can be made rigid (as in a thick solid mat slab), or where the framing system can be made rigid (as with continuous solid, cast in-place, reinforced concrete walls).

Walls. Walls should be constructed to allow movement in all directions. Where possible, brittle materials (plaster, stucco, concrete masonry unit) should be eliminated and flexible materials (vinyl wall covering, gypsum board on metal or wood studs with exterior brick veneer, moveable-type office partitions) substituted. Precast concrete or insulated metal wall panels should be considered when appropriate. Metal or wood stud and gypsum board partitions should be used in lieu of concrete masonry unit partitions where criteria will allow. The use of long runs of masonry walls should be avoided. When masonry is used, it should be broken up at frequent intervals by the use of vertical strip windows or precast panels. When long runs of masonry walls cannot be avoided, neoprene control joints should be used at frequent intervals through both wythes and through all bond or tie beams at 15 ft on centers so that the wall will be separated into small sections. Walls should be provided with lateral support through flexible connections to the building frame so that the wall will span within its allowable limits, but still allow differential movement without cracking the wall (see Figures 5-12). Special attention should be given to the location of control joints where a steel frame is used, because thermal movements of framing systems and walls can be a problem.

Basements. Small basements under large buildings (normally used for mechanical rooms) should be avoided by placing these rooms at the first-floor level. Not only will this be more economical, but problems of waterproofing, lateral soil movement against basement walls, possibility of creating a dam for subsurface water in a gravel stratum (perched water table), and differential soil movements will be reduced or eliminated. Buildings with basements under all of the building may be considered; however, basement floors should be supported, waterproofing should be used, and use of subsurface drainage systems (to take care of subsurface water) should be studied. Perimeter drains to a sump pump should be used, but located so as not to supply moisture to moisture-deficient subsurface soil. Lateral earth pressure against the basement wall will approach the passive earth pressure, and walls should be designed using the following minimal conditions unless laboratory analysis requires an increase in loading. Lateral earth loads on structures should be based on $P = whk$

where P = lateral pressure
w = wet unit weight of earth (120 psf minimum; may be higher in some materials)
h = depth of structure
K = coefficient of lateral pressure (use 0.5 for retaining walls, 0.7 for basement walls and box culverts; may be higher in some areas).

Surcharge loads should be included where applicable. Investigation should also be made using 100 percent hydrostatic pressure (where applicable) at one-third overstresses.

4 STRUCTURAL FOUNDATION DESIGN

A. Concrete. All building foundations should be designed for 3000 psi concrete, except where use of higher strength can be economically justified.

B. Grade Beam Design. Grade beams should be designed in accordance with the current ACI Code. The minimum reinforcement for grade beams should be 0.5 percent. Reinforcing should not be cut short of supports due to the shifting of the moments when footings heave. Reinforcing should be the same top and bottom and should be continuous in order to resist moment reversals caused by differential foundation movement (see Figure 13).

A void should be used under all grade beams (see Figures 14 and 15). This does not apply to ribbed mat foundations. Foundation studies should investigate requirements for a foundation drain. When a foundation drain is required it should not be connected to a storm drainage system which would backwater into the crawl space. Check valves are not considered to be effective in preventing back flow.

C. Supported Slabs.

1. General. Most buildings in expansive soils areas (excluding family housing and buildings, such as warehouses and hangars, where floors are subjected to vehicular traffic or where ribbed mat slab foundations are used) should have structurally supported first floors, especially where crawl space can be provided at little extra cost. All toilet areas, refrigerated areas, and other areas with ceramic, quarry tile, or terrazzo finish should be supported to

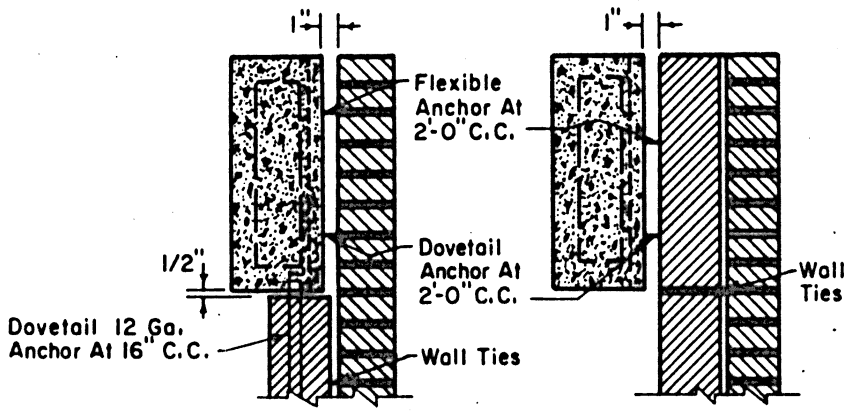

WALL ANCHORAGE TO CONCRETE BEAM

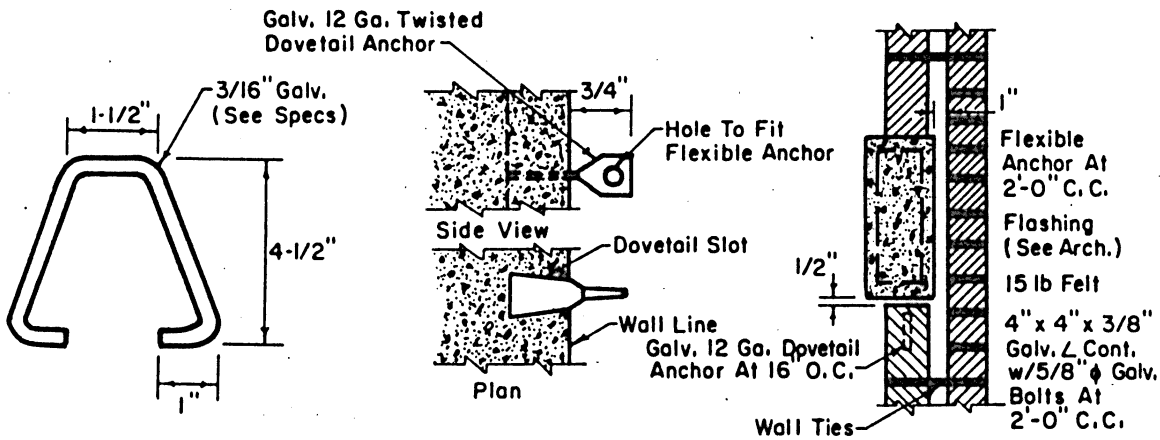

FLEXIBLE ANCHOR

Load Capacity Of Each Anchor = 600 lbs

TWISTED DOVETAIL ANCHOR

CONCRETE BEAM WITH SHELF ANGLE

Note:

Ties to beam are required when column ties are omitted.

Figure 5. Wall ties to concrete beams.

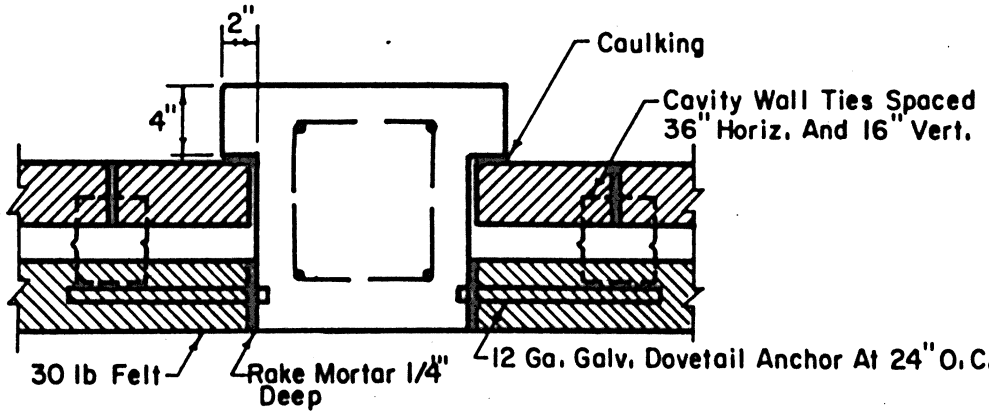

EXPOSED COLUMN

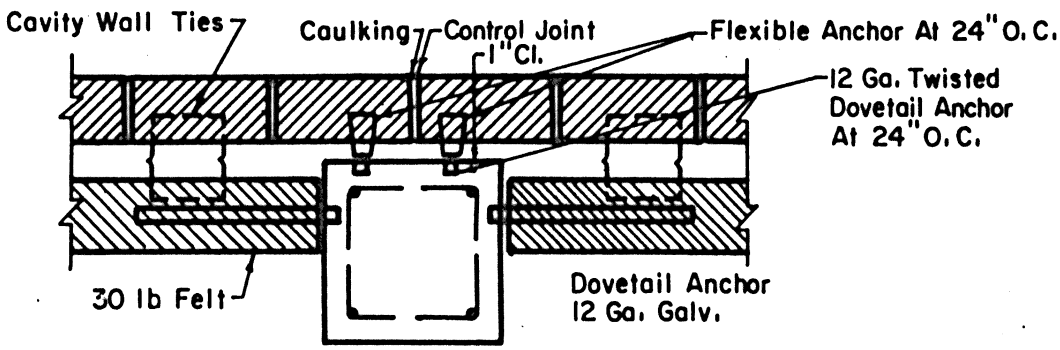

CONCEALED COLUMN

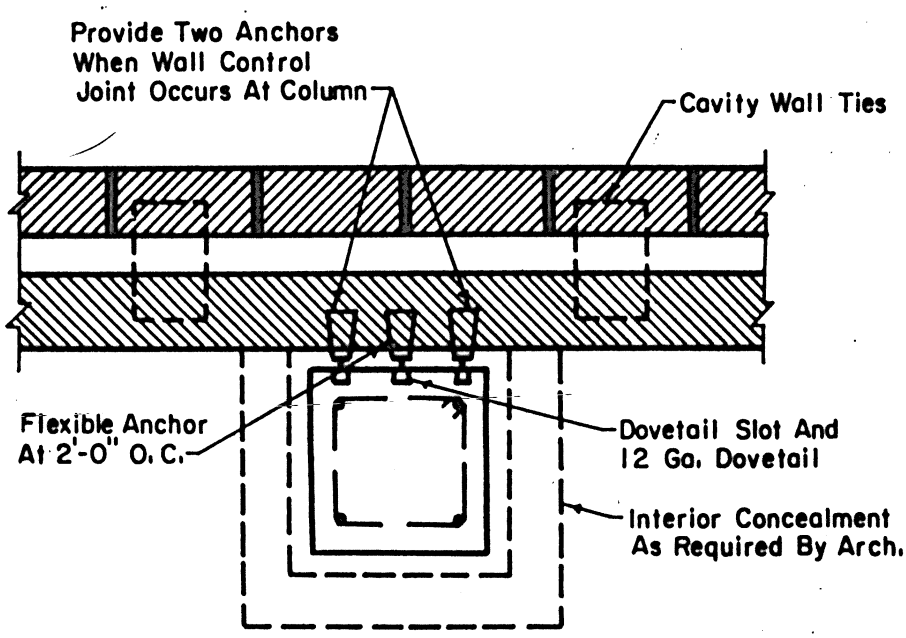

BYPASSED COLUMN

Note: Ties to column are required only when ties to beam are omitted.

Figure 6. Wall ties to concrete column.

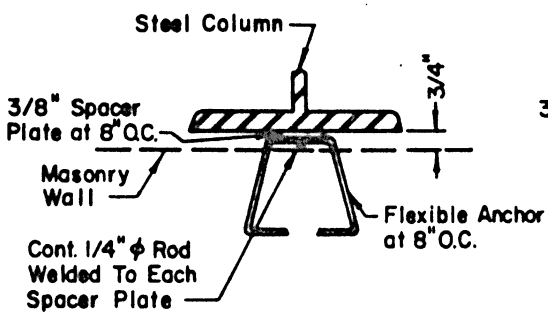

FLEXIBLE ANCHOR

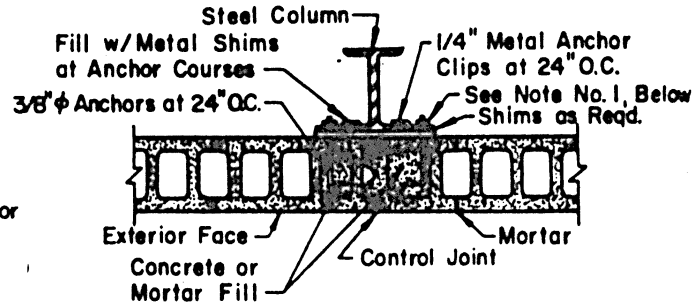

OPTIONAL WALL AND COLUMN CONNECTION

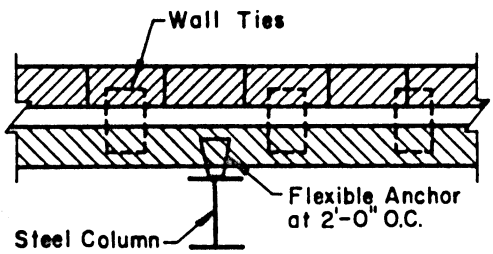

STEEL COLUMN - NO CONTROL JOINT

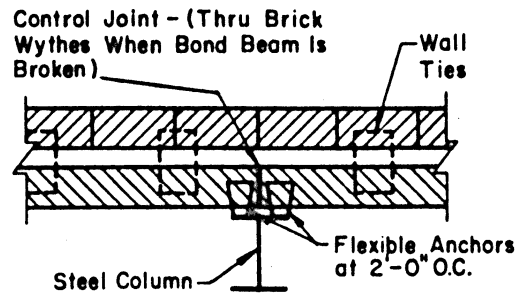

STEEL COLUMN - WITH CONTROL JOINT

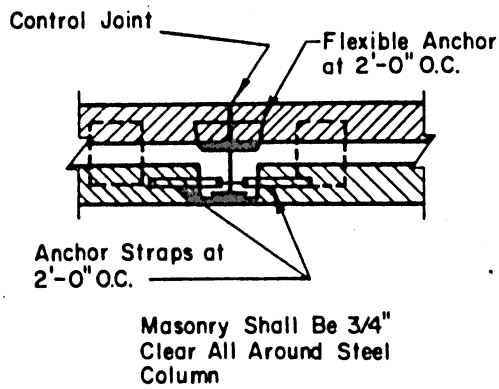

STEEL COLUMN IN EXTERIOR WALL

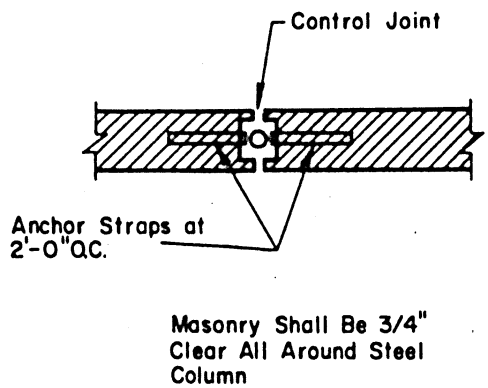

STEEL COLUMN IN INTERIOR WALL

Ties To Columns Are Required Only When Ties To Beam Above Are Omitted.
Do Not Connect Column To Wall At Corners of Buildings

Note:

1. Nuts Should Not Be Tightened Excessively, Horizontal Movement of Wall Is Necessary.

Figure 7. Wall ties to steel column.

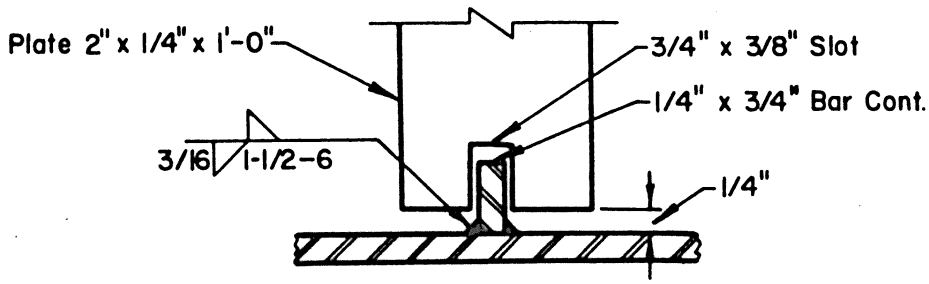

DETAIL "A"

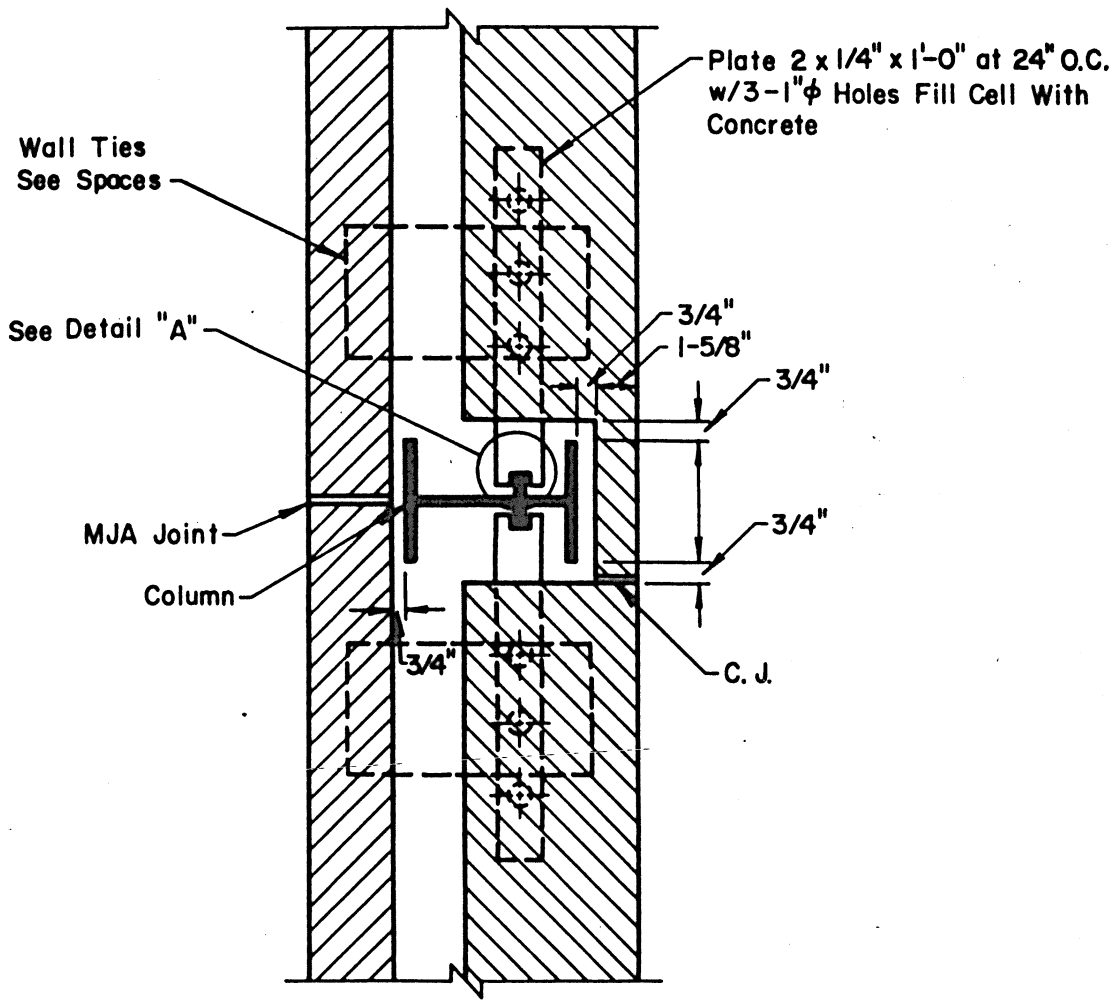

Figure 8. Wall ties to steel column.

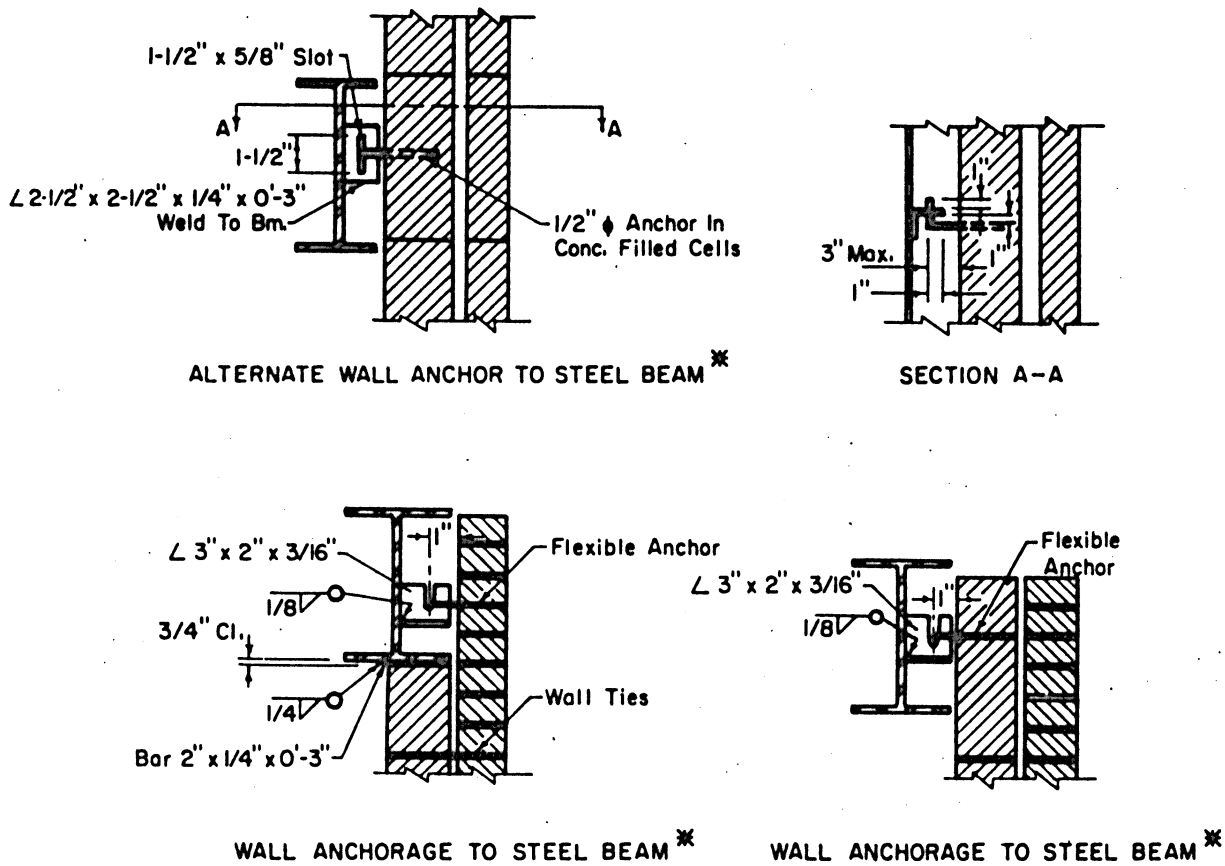

Note:

Ties to beam required only when ties to column are omitted.

✱ 2'-0" Spacing for Exterior Walls
4'-0" Spacing for Interior Walls

Figure 9. Wall ties to steel beam.

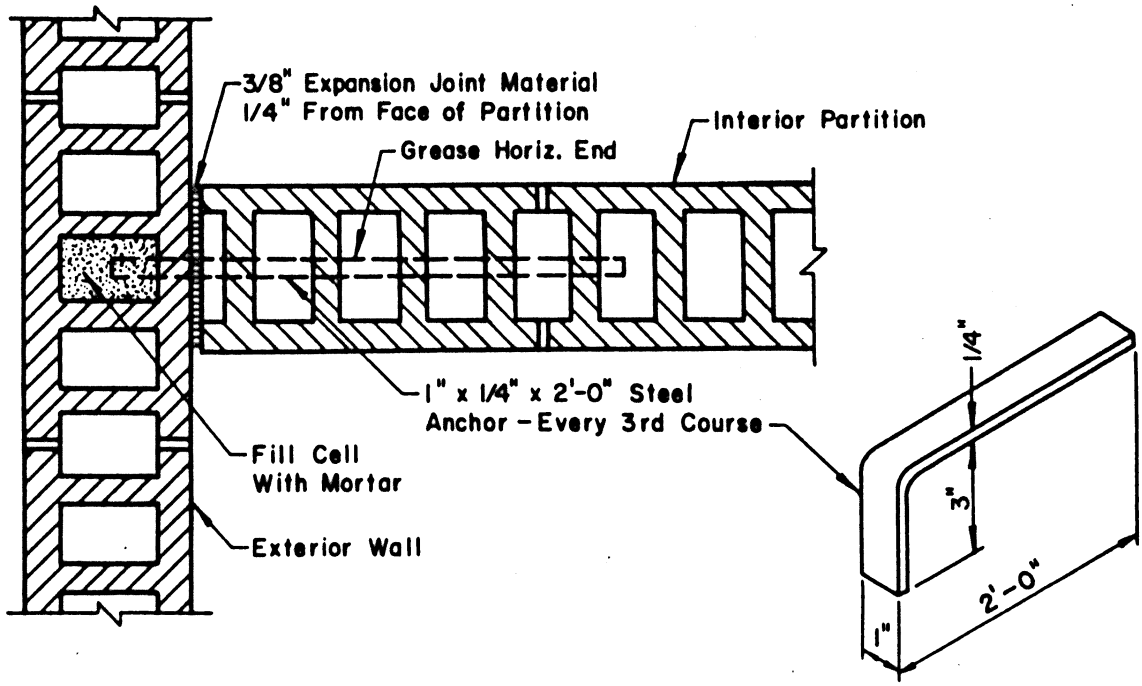

FOR PARTITIONS 6" WIDE OR WIDER

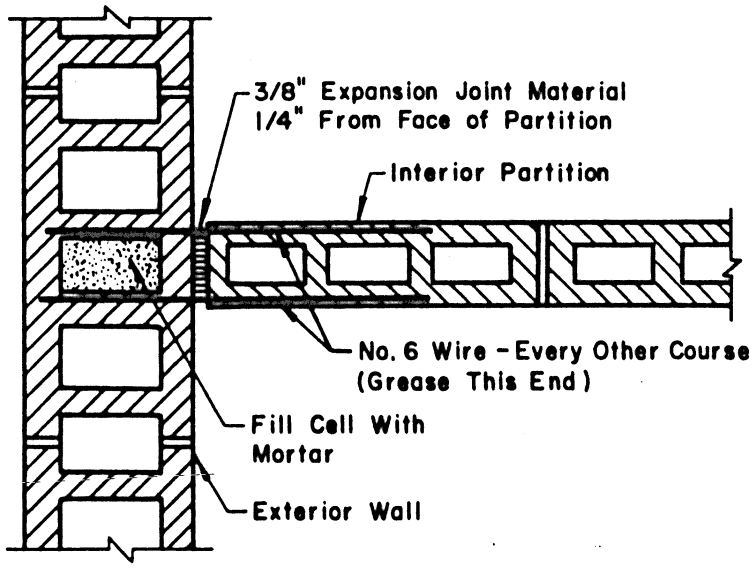

FOR 4" WIDE PARTITIONS

Figure 10. Wall connections with control joints.

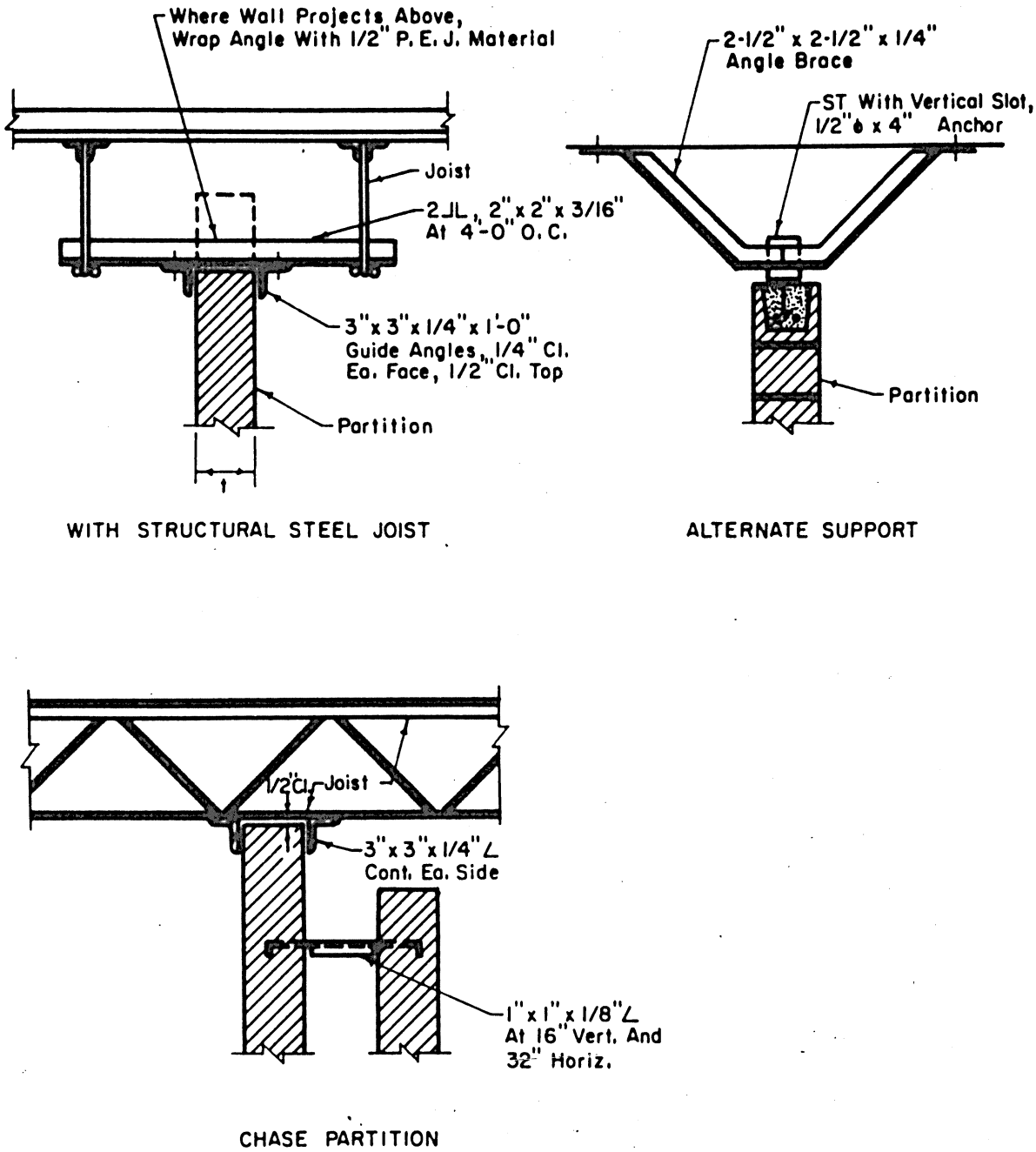

Figure 11. Typical details of interior partitions.

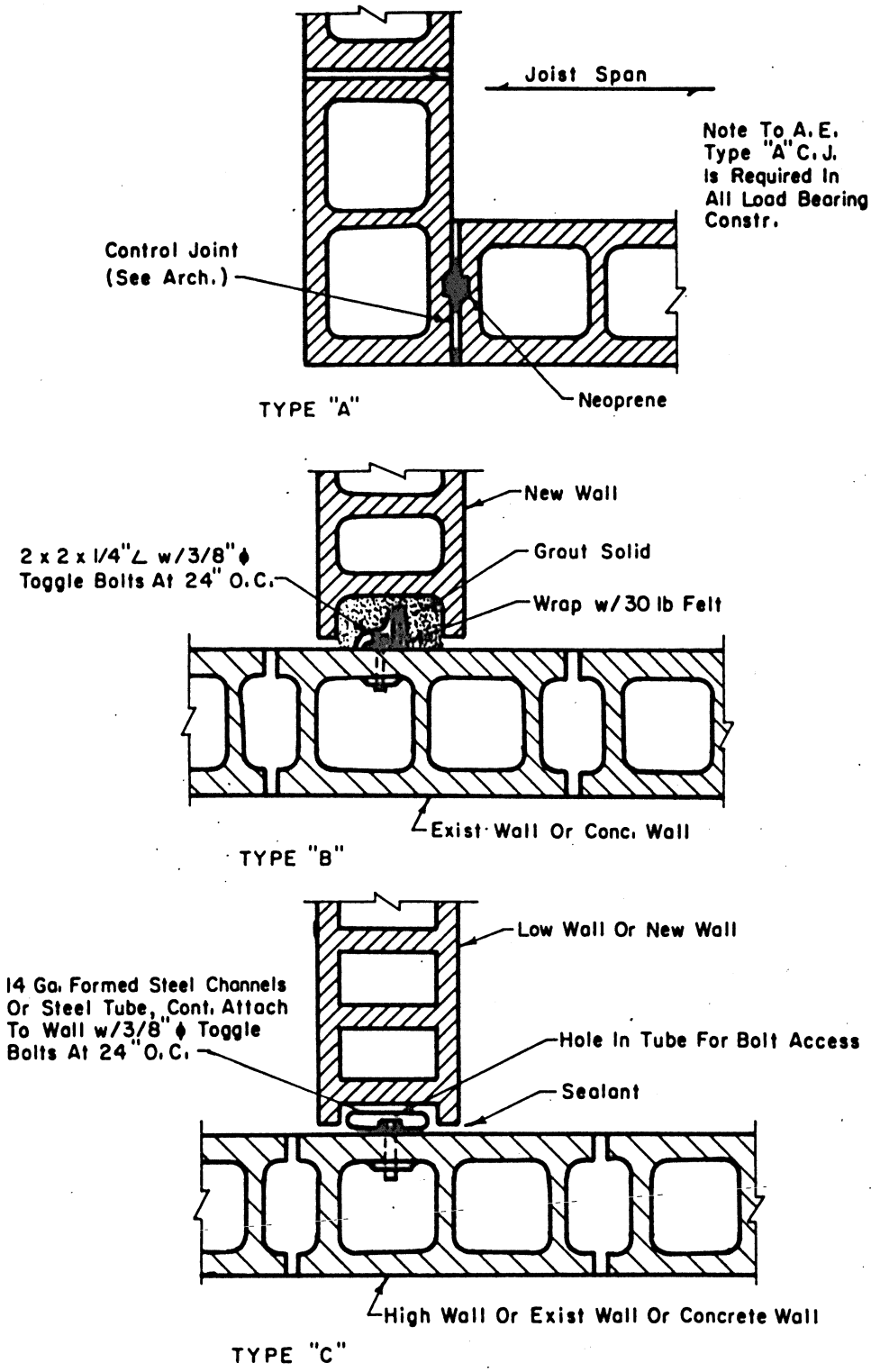

Figure 12. Special control joint details.

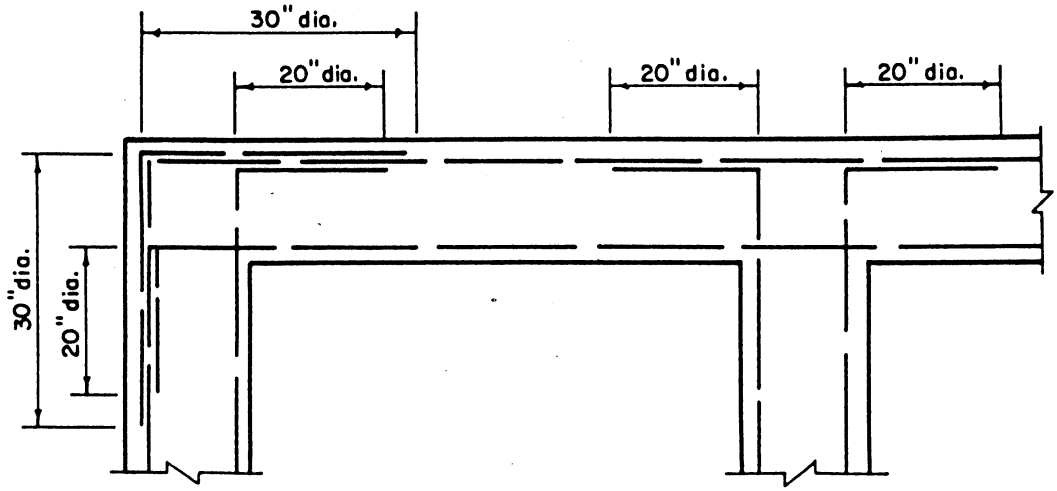

TYPICAL CORNER REINFORCING (FOR ALL REINFORCED CONCRETE BEAMS, WALLS AND REINFORCED MASONRY, UNLESS OTHERWISE NOTED)

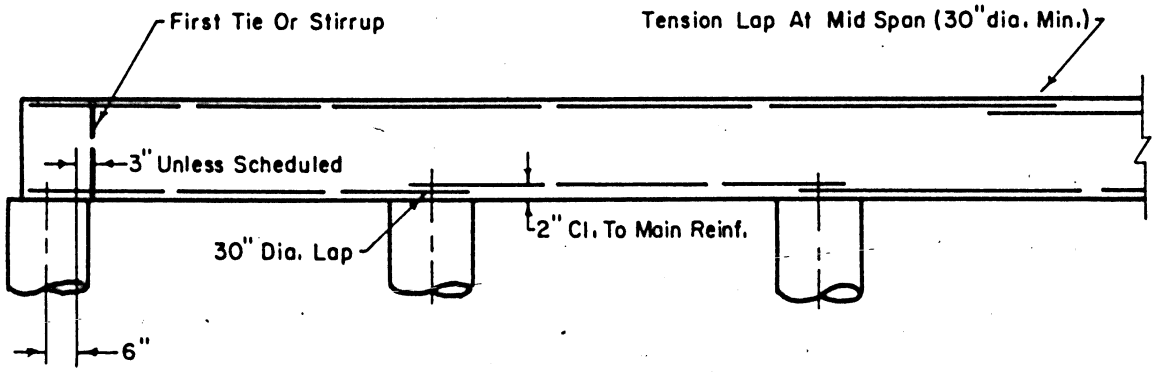

Figure 13. Typical grade beam reinforcing diagram.

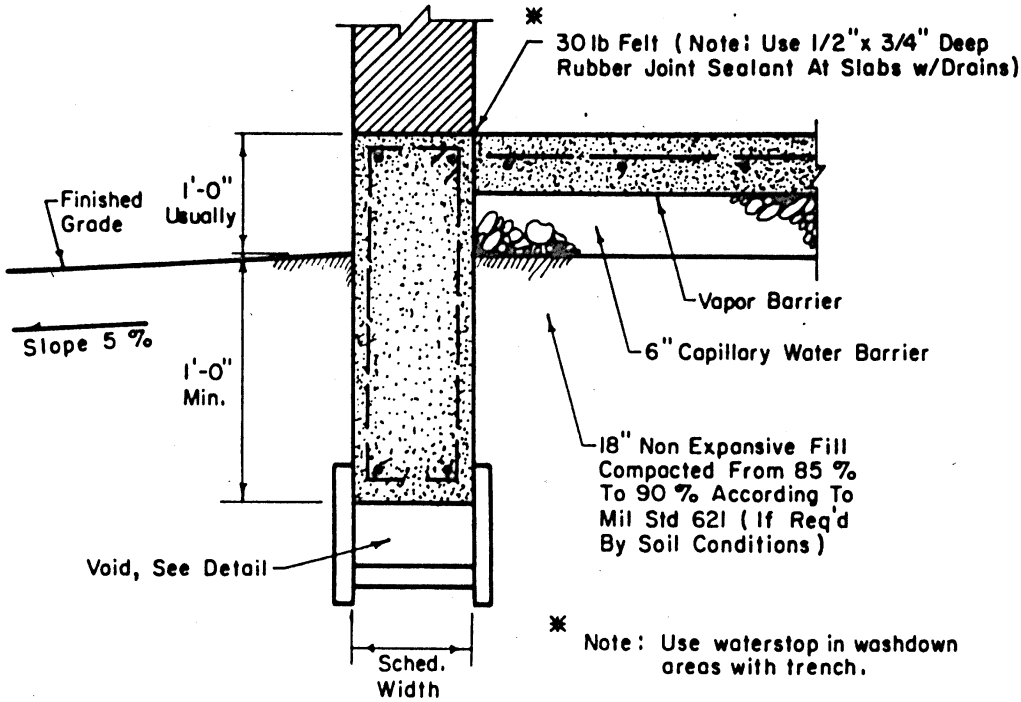

EXTERIOR

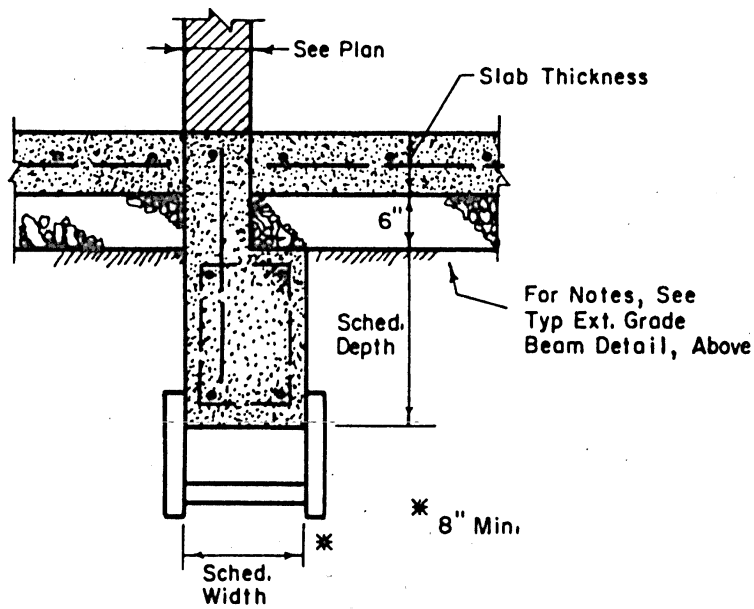

INTERIOR

Figure 14. Typical exterior and interior grade beams.

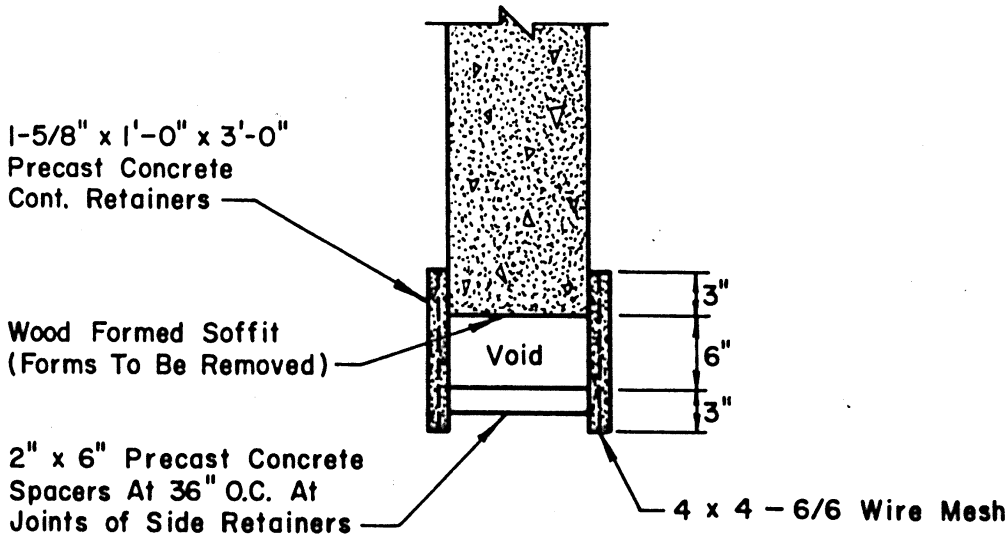

VOID DETAIL

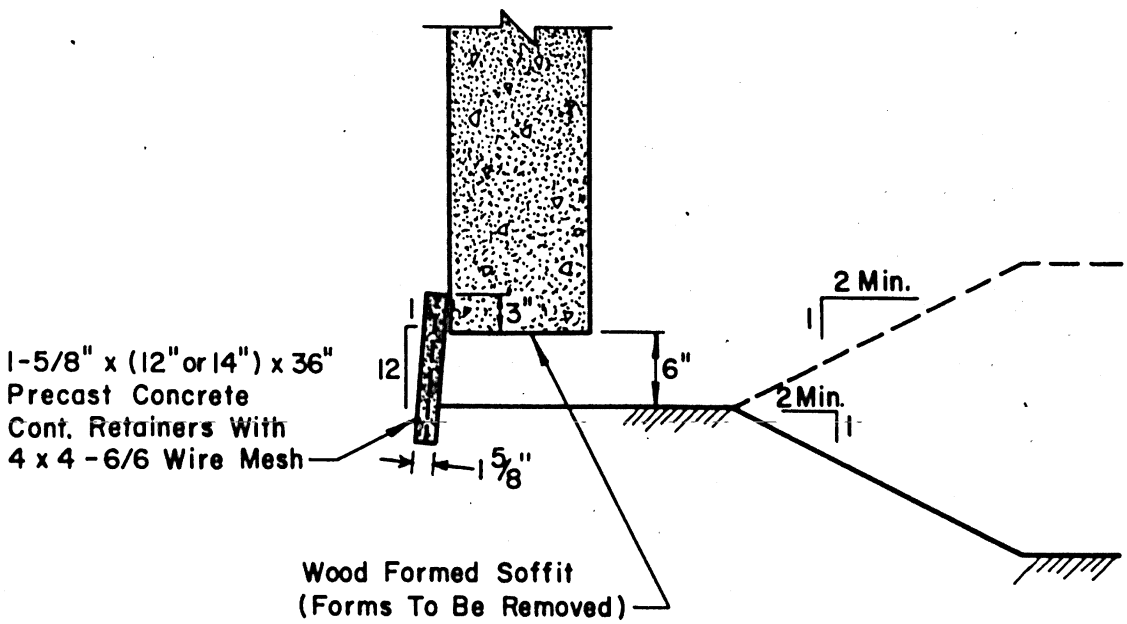

VOID AT FOUNDATIONS WITH CRAWL SPACE

Figure 15. Typical grade beam void details.

prevent cracking of the cove base due to heaving or settlement of the floor slab. Also, all buildings, such as hospitals and dental clinics, which require a crawl space to accommodate extensive underfloor plumbing must have supported first floors.

2. *Expansive overburden soils.* Where the main building footings can be carried below the more highly expansive overburden materials, the first floor framing can be flat or ribbed concrete slabs placed over 6-in. carton forms or precast concrete over a 6-in. void. A crawl space should be used if there is extensive under-floor plumbing. Framing, as described in section C3 of this chapter, may also be used where economical.

3. *Expansive overburden and primary geologic materials.* When the main building footings are founded in expansive primary materials, and the overburden soils are also expansive, the first floor framing should be more flexible. A lightweight concrete slab on metal form supported by steel bar joists and steel beams over a crawl space should be used. In some cases, precast concrete simple spans over a 6-in. void may give adequate flexibility. Heavy concrete flat slabs or concrete slab and beam construction should not be used since they will be adversely affected by the larger movements expected.

4. *Mechanical rooms.* Mechanical room floors should be specially designed with vibration taken into account. If a concrete slab over metal form supported by bar joists is used, composite action should be used for increased rigidity. A separate foundation carried through the floor should be provided for heavy equipment which produces considerable vibration. It may be possible to use a slab on-grade resting on 18 inches or more of compacted nonexpansive fill. This should help minimize vibration problems.

5. *Loading dock slabs.* Loading dock slabs should be supported over a crawl space or over a 6-in. void (usually carton forms). Criteria which dictate the type of framing for the main building area will usually dictate the framing used here, also.

6. *Crawl spaces.* (See details in Figures 16 and 17.) Crawl spaces must be used where indicated in paragraph C1. The framing over a crawl space should be in accordance with paragraphs C2 and C3. Crawl spaces do not usually require a drainage system. Access to the crawl space must be provided. Adequate ventilation must be provided through exterior grade beams or by return air from the building heating and cooling system. Where steel floor framing is used, steel, instead of concrete plinths should be used, to the top of the drilled pier shafts. (See Figures 16 and 17 and paragraph G below.) Also, provision should be made for thermal movement between steel floor beams and concrete grade beams or piers.

D. Grade Beams Under All Masonry Walls. As a general rule, grade beams should be used under all masonry walls, even 4-in. walls (slab on grade-type construction).

E. Corner Reinforcing. The corner reinforcing detail shown in Figure 13 should be used to prevent cracking of grade beams at corners.

F. Foundation Notes. The applicable notes shown in Figure 18 should appear on the foundation plan drawings.

G. Plinths.

1. As used in this report a plinth is a short stub column, 3 ft.-6 ft. long, used to extend a footing member to the superstructure. Most concrete plinths have at least 1 percent reinforcing and are supported by a larger drilled pier. A number of concrete plinths have failed in expansive soils areas on Corps of Engineers projects. They fail either in direct compression or by diagonal cracking, caused by excessive combined bending and compression load. The excessive axial load is caused by expansive soils uplift on the drilled pier shaft or belled footing. The excessive bending moment is caused by the fact that adjacent piers do not move at the same rate, producing high moments in the concrete beams. The plinth fails since it is much weaker in bending than the beams above and is weaker in compression than the larger drilled pier shaft below. Concrete plinths should not be used where steel plinths can be easily and economically substituted. Where no crawl space is used, the drilled pier shaft should be brought to the underside of the interior beams. The top 10 ft. should be reinforced as described in section H.

2. Plinths must be designed so that excessive moments, introduced by differential movements of piers, will not occur in the plinth. Steel plinths should be designed for eccentric loads caused by

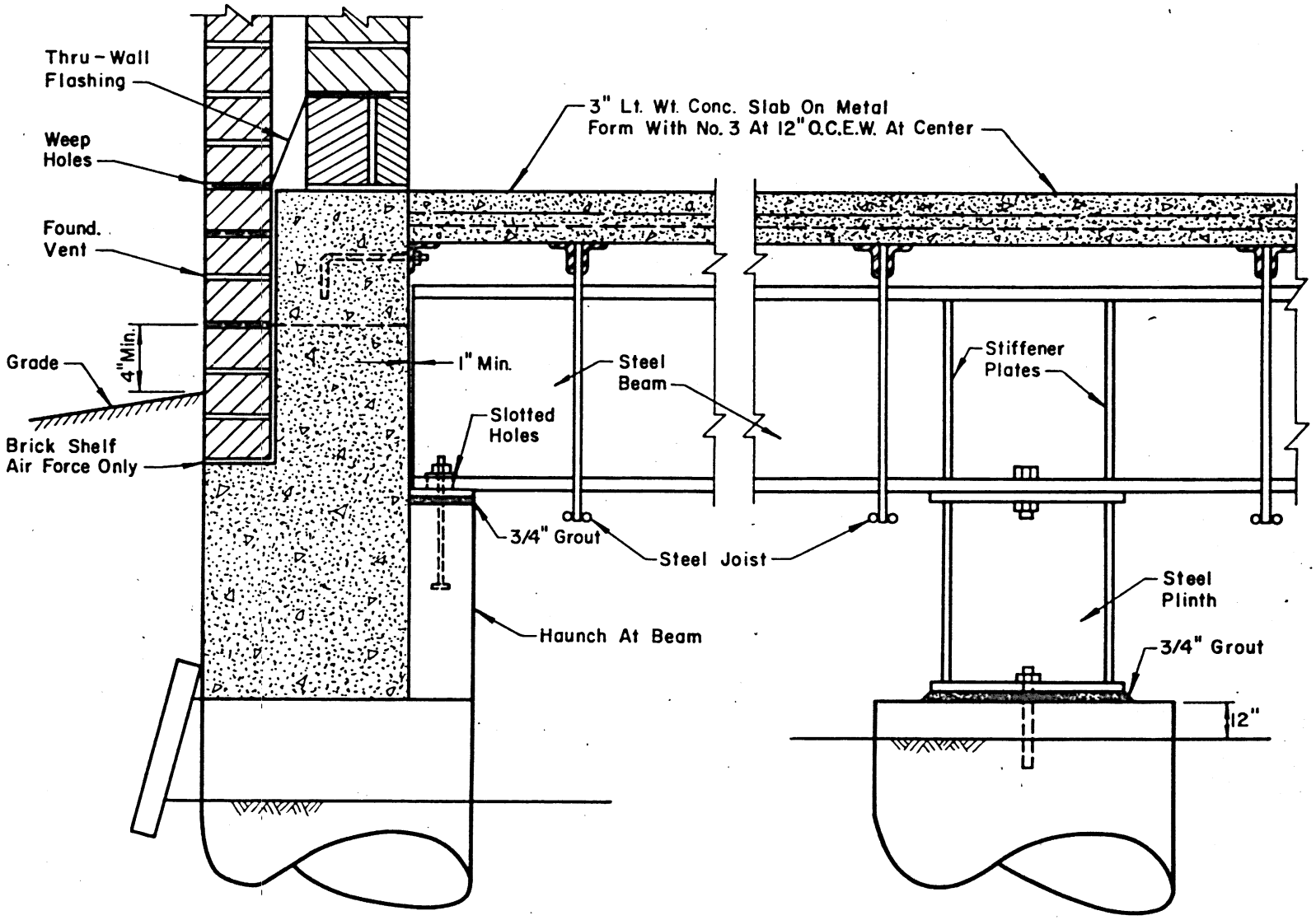

Figure 16. Typical bar joist first floor framing.

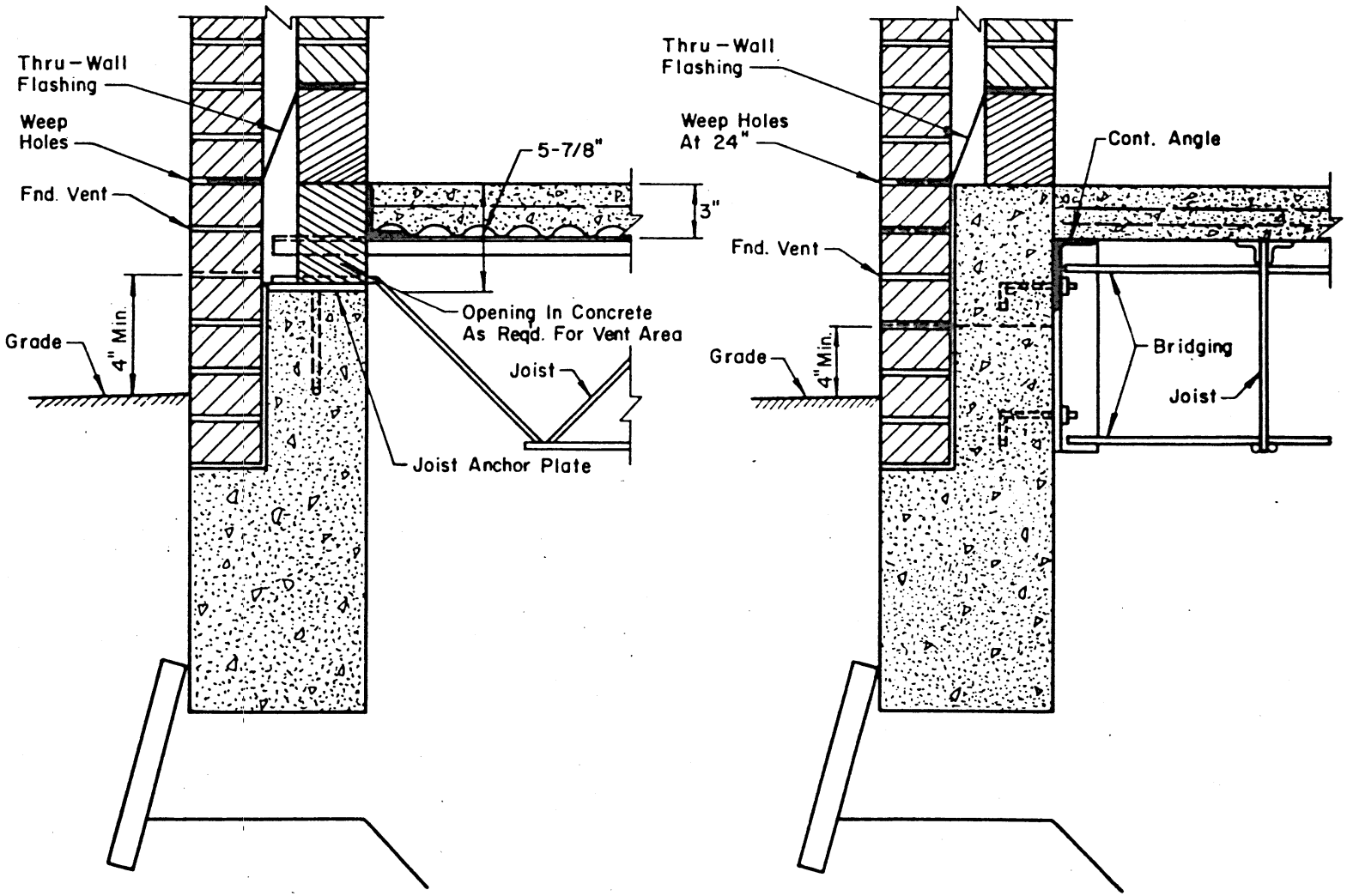

Figure 17. Typical cast-in-place or precast concrete grade beam with steel bar joist floor framing.

1. Place 6" capillary water barrier under all unsupported floor slabs on fill except as otherwise noted.

2. Fill:

   A. Place 18" min. nonexpansive fill under the 6" capillary barrier. Nonexpansive fill to be compacted to 85% to 90% density according to Mil. Std. 621.

   B. All fill placed under building slabs shall be nonexpansive and shall be compacted to 85% to 90% density according to Mil. Std. 621.

3. Design soil bearing pressure _____ p.s.f.

4. Drilled piers shall extend approx. _____ ft. below existing grade into _____.

5. All grade beams shall have a void under them (see detail).

6. All expansion joints shall be 30# felt, unless otherwise noted.

7. Construction joints in ribbed mat foundation shall be spaced as shown on plan.

Figure 18. Foundation notes.

uneven bearing on top of the plinth (see Figure 16).

H. Drilled Pier Design. Piers should be designed as short tied columns with 1 percent minimum steel area using ASTM A615 grade 60 vertical reinforcing. Also, the shafts should be designed to sustain tensile forces as determined by soils investigations. The pier shaft diameters should be kept as small as possible, considering loading conditions and construction requirements. Eighteen-inch diameter shafts are generally considered minimum up to a depth of 40 ft. Piers deeper than 40 ft should be a minimum diameter of 24 in. (Pier shafts should be increased in 6-in. increments; i.e., 18 in., 24 in., 30 in., etc.) Bells on piers should not be specified larger than the equipment limitations for the pier shaft diameter specified. In general, bells should be sized for dead load plus one half live load. Vertical design loads should be computed only to original grade (the weight of pier shafts and bells should not be included). Common piers at expansion joints, that is, pier shafts supporting two or more columns, should be avoided if at all possible, because many instances of distress have been experienced with this design. Specifications should require that the reinforcing steel be centered within the pier shaft before concrete is placed. The drawings should clearly show the kind and condition of the materials on which the footings will be placed. For details of a typical drilled pier shaft, see Figure 3. Except where steel plinths are used, the pier shaft should be extended to the underside of grade beams (and floor beams). The pier extension should be made stronger than the drilled pier below. (Use #4 ties at 6-in. on center for top 10 ft of shaft, and 2 percent minimum reinforcing.)

I. Stoops. (See details in Figures 19 and 20.) Large stoops should be supported in a manner similar to the building foundation. Small stoops may be turned-down-edge type and slip dowelled to the foundation where stoop movement would not affect appearance or use. Main building entrance porches such as entry-ways to dormitories, officers quarters, libraries, chapels and mess halls should be supported.

J. Building Slab on Grade Design.

1. Design. The thickness of most concrete slabs on-grade should be 5 in. Small buildings such as family housing may have 4-in. thick slabs. Six-inch floor slabs may be used in warehouses with loading up to 300 psf or more, see TM5-809-12.

2. Criteria. The following criteria should be observed:

A. Use contraction joint details shown in

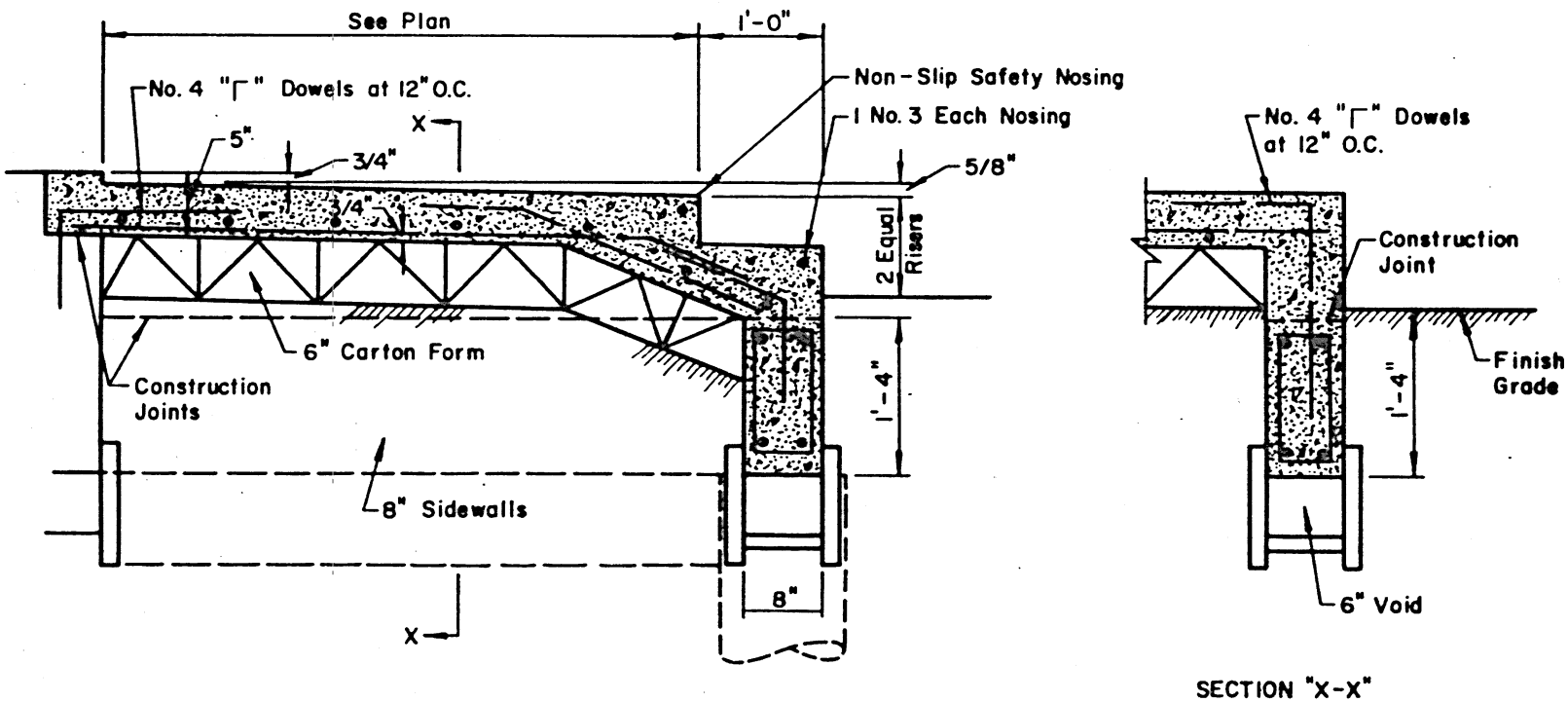

Figure 19. Typical supported stoop.

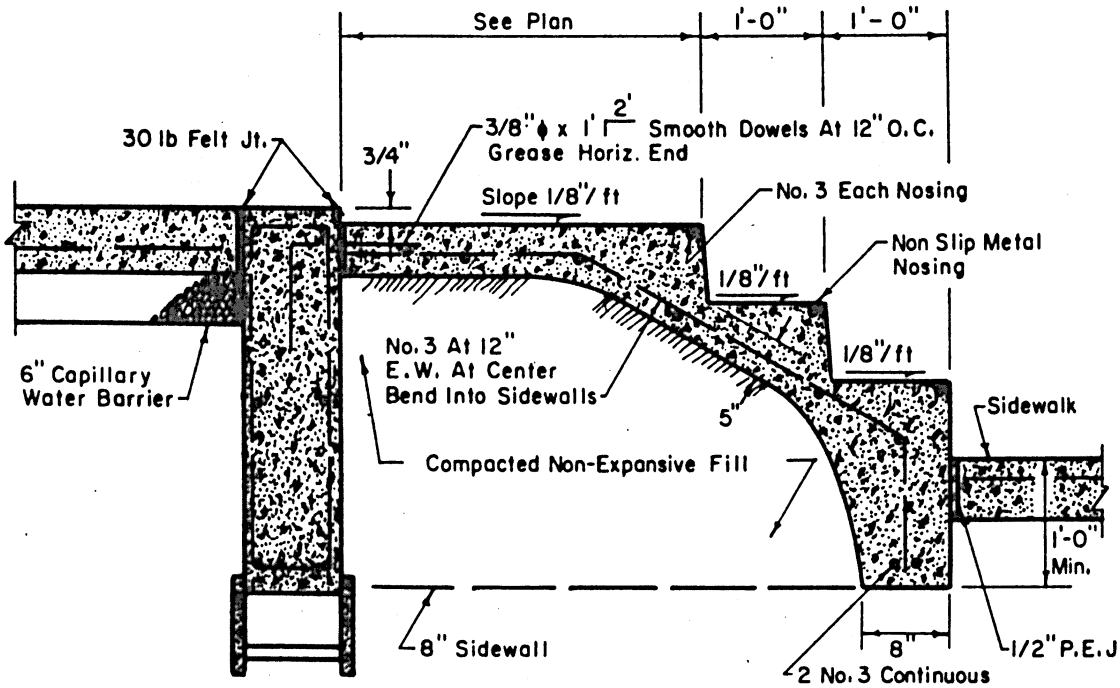

Figure 20. Typical "articulated" stoop.

Figure 21.

B. Contraction joints should enclose an area of 625 ft.^{2} or less, except where expansive cement is used.

C. Use a vapor barrier under all slabs on grade. (Not required for stoops, transformer pads, pavement, or porches.)

D. Use 6 in. of capillary water barrier under all building slabs on-grade (where slabs are above outside finished grade). Basement slabs should not have gravel under them.

E. Use 30# felt between floor slabs on grade and foundation beams and piers.

F. Slabs on grade should not bear on grade beams except where articulated pads are used.

G. Slabs on grade should be 3000 psi concrete unless use of higher strength concrete can be economically justified.

H. Slabs on grade subjected to heavy vehicular traffic should have an ultimate flexural strength of 650 psi at 90 days (Class P concrete).

I. Slabs on grade should have 0.25 percent minimum reinforcing each way. In 4-in. and 5-in. thick slabs, the minimum reinforcing should be #3 bars at 12 in. on center each way; in 6-in. thick slabs the minimum reinforcing should be #4 bars at 12 in. on center each way or the equivalent area of wire mesh.

J. Where columns occur, contraction joints should be placed on column centerlines.

K. Slabs on grade with perimeter felt joint and with floor drains, such as mechanical rooms, should have a ½ in. × ¾ in. sealant on top of the felt joint.

L. In washrack areas, use rubber or plastic waterstop between grade beams and slab on-grade, and at contraction joints.

M. Nonexpansive fill must be used under slabs on fill (18 in. is minimum). Depth of fill depends on the type and extent of surface material encountered.

N. In small areas such as entries, janitors' closets, and corridors where compaction of fill is hard to control, use a structural slab over carton void forms.

K. Ribbed Mat Foundation.

1. Ribbed mat foundations can be used for many types of buildings, depending on soil conditions. This type of foundation is a simple and economical

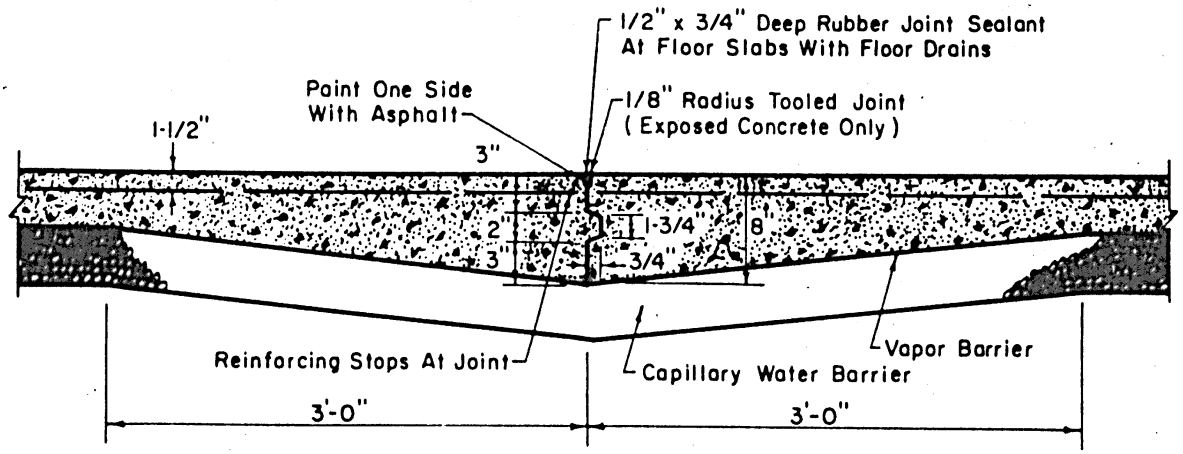

FOR FLOOR SLABS UP TO 7 IN. THICK

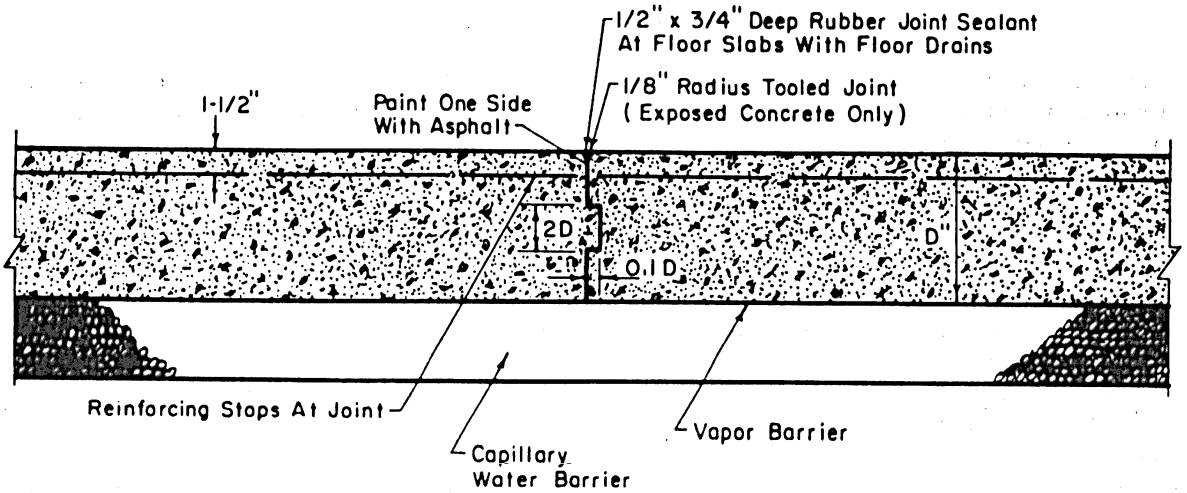

FOR FLOOR SLABS 8 IN. THICK AND OVER

Figure 21. Contraction joint detail.

solution to many foundation problems. The foundation material should be nonexpansive, either existing material or compacted fill, and capable of supporting the low bearing pressures. When placed on a compacted nonexpansive fill, foundation movements are prevented since seasonal moisture changes have little effect on this material. The compacted fill also distributes the load more uniformly to the existing material. Many times in expansive soil areas, a ribbed mat slab on compacted nonexpansive fill will not only provide the most economical foundation, but also will provide the best foundation. The ribbed mat foundation for light buildings should be designed as continuous or spot footings depending on the type of superstructure (see details shown in Figures 22 and 23).

2. The following criteria should be observed:

A. Use the construction joint detail shown in Figure 24.
B. Construction joints should be placed 25 ft on center each way so as to enclose an area of 625 ft^2, except where expansive cement is used. Place joints between column lines.
C. Concrete should be 3000 psi concrete.
D. Stiffener beams should be placed at 25 ft on center each way and generally at column lines or under bearing walls. Diagonal stiffener beams should be used at all exterior corners.
E. Vapor barrier, capillary water barrier, and nonexpansive fill should be used as with slab on grades.
F. Expansion joints should be placed at approximately 150-ft intervals through the ribbed mat slab for large buildings. The location should correspond with building expansion joints.
G. Exterior foundation beams should extend below the local frost line and should be placed on similar bearing materials. When beams are placed on compacted fill, the minimum depth of fill should be 18 in. If necessary, the existing grade should be excavated as required to provide the minimum depth of fill.
H. The foundation beams should be designed for the wall, roof, and floor loads actually bearing on them, insuring that the width is adequate for the soil-bearing capacity. Beams could be widened at columns to form footings which are sized for all or a portion of the vertical column loads using allowable soil bearing capacity. For single-story buildings, ribbed mat slabs usually require an allowable bearing capacity of only 1000-2000 psf.
I. Struts or tie beams should be used between rigid frames to take the horizontal thrust. These beams also form the ribs of the ribbed mat slab.
J. Minimum reinforcing top and bottom should be used in all beams in accordance with the ACI Code (0.5 percent). For beams 150 ft in length or more use 1 percent. More is used as required by beam on elastic foundation analysis or, in the case of heavy high-rise buildings, uniform base pressure analysis. Minimum slab reinforcing should be 0.25 percent. Additional reinforcing is required where construction joints are placed more than 25 ft apart.
K. Where floors are subjected to vehicular loading, the floor slab should be designed as pavement. Where the slab is subjected to heavy aircraft loading, class A concrete or higher strength where required should be used.
L. A modulus of subgrade reaction, K = 250, is used due to the compacted nonexpansive fill and capillary water barrier under the foundation.
M. Foundations for small buildings may be designed in accordance with *Criteria for Selection and Design of Residential Slabs-on-Ground* prepared by the Building Research Advisory Board (publication 1571 of the National Academy of Sciences). Type III slabs should be used for expansive soils areas.

L. Heavy Mats. Where buildings are the heavy high-rise type, which requires a rigid foundation, a thick solid slab mat should be used when a suitable foundation material is encountered. Heavy mats should be designed as a two-way plate with bearing pressures distributed between columns or walls. Normally, uniform base pressure, based on a stability analysis of the entire building, can be assumed.

5 GRADING AND DRAINAGE

Building sites should be graded to drain surface water well away from the building. Side hill building sites should be carefully engineered to control drainage. Particular attention should be taken to see that surface inlets and other drainage structures are sized large enough to handle surface waters adequately.

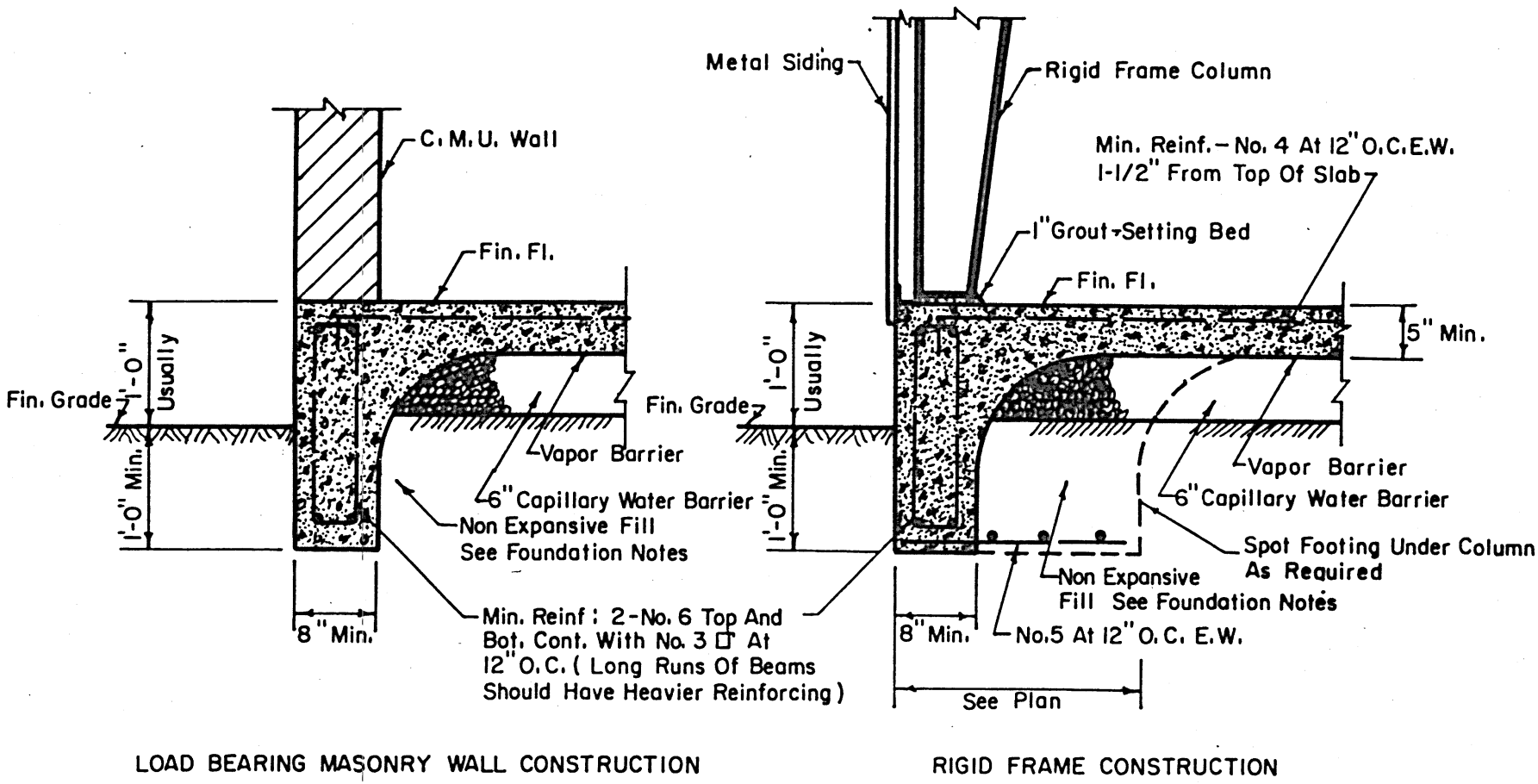

Figure 22. Typical ribbed mat slab foundation.

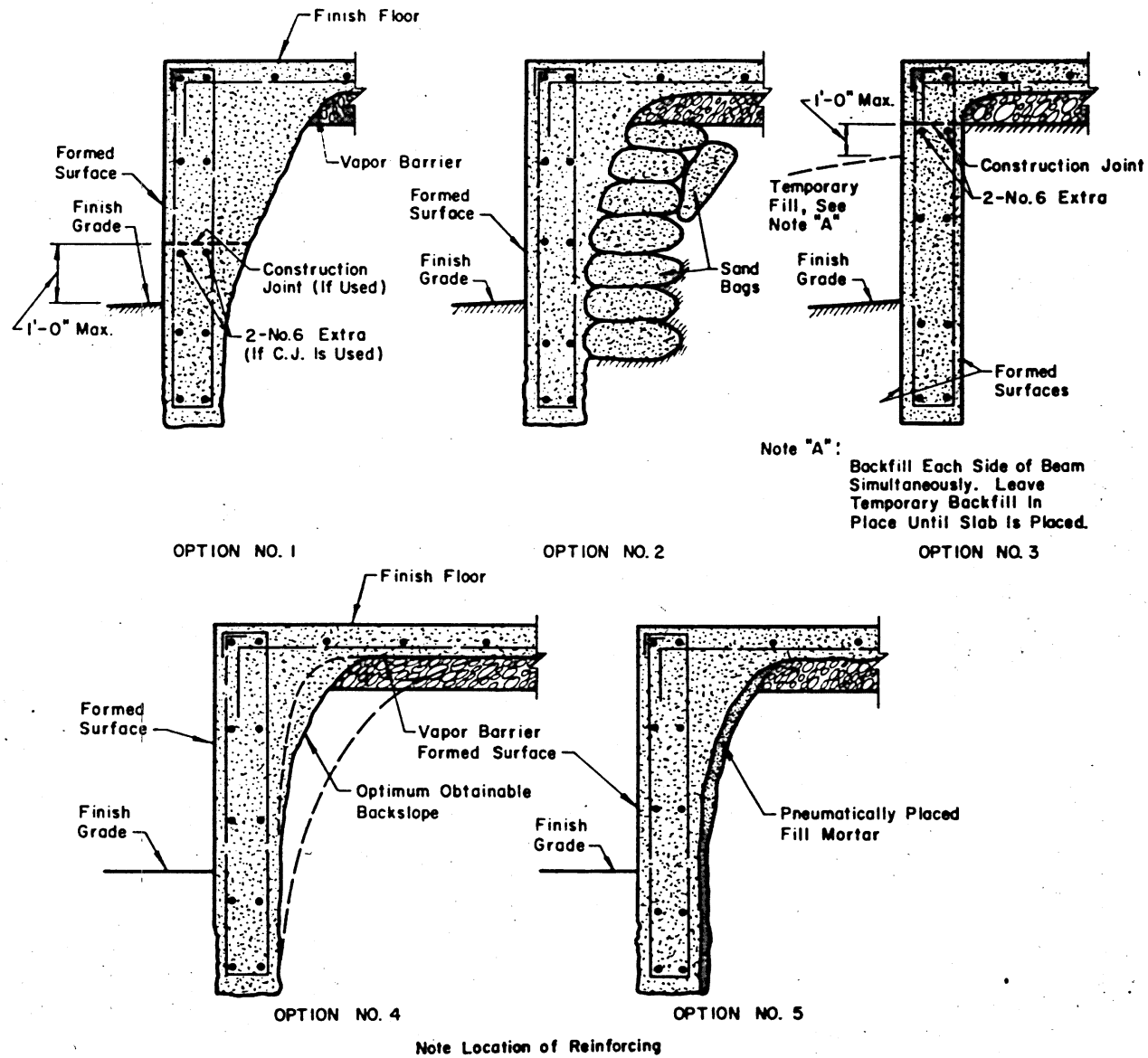

Figure 23. Optional construction details of exterior beams (interior beam similar) for ribbed mat construction.

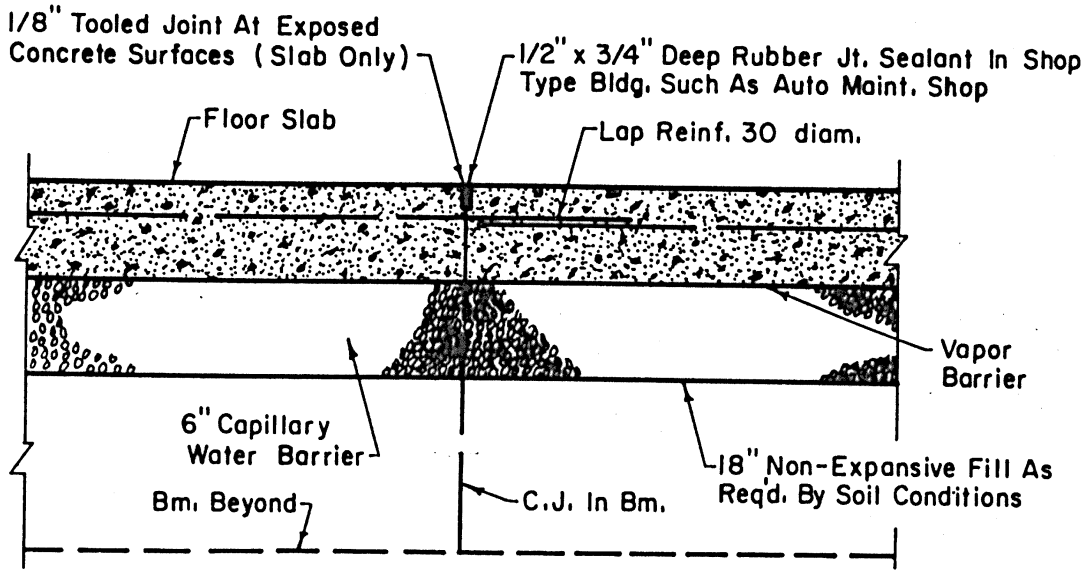

NOTE: Construction joints are to be provided in ribbed mat thru beams and slab at approx. 25 ft O.C.—each way These joints should be shown on foundation plan. Where expansive cement is used joints may be deleted.

Figure 24. Slab on grade construction joint (ribbed mat construction).

Subsurface and surface drainage at each building site should be studied to see if the building will create a dam or pocket to trap surface or subsurface water under or around the building. This refers mainly to sites having an underground perched water table. Building sites which compromise on good drainage should be rejected. Areas subject to accidental spillage of water (around air-conditioning cooling towers and such) should be given special design treatment, such as providing an impervious surface with a curb so that spillage can be discharged into storm sewers or be carried away from the building site by other means.

6 BENCH MARKS

Bench marks should be provided on grade beams so that the location and magnitude of foundation movement during the life of the structure can be determined. Elevations of bench marks (see detail shown in Figure 25) on the grade beams should be taken as soon as practicable after grade beam concrete has set. Elevations should also be taken again at completion of the building. The elevations taken on the building bench marks should be referenced to an independent deep-seated bench mark.

7 UTILITIES

Where water lines or sewer lines connect to the buildings, flexible connections should be used so that movement can take place without breaking the lines. Much damage to buildings has resulted from water lines breaking under them. Water, sewage, and drain lines should be tested just before final acceptance. Disturbance of utility lines, especially sewage lines and drain lines, during construction could go undetected for a considerable period of time. Roof drains should be carried on the outside of the exterior walls where possible and rainwater carried away from the building. All sewer and water lines in crawl space areas should be suspended from the superstructure free from earth.

Main storm sewers, sanitary sewers, and water lines should not be carried under the building, and building service should be routed the shortest distance to the perimeter of the building. Abandoned lines should be removed and replaced with nonexpansive material except at the exterior building line where a 2 ft plug of impervious material should be used.

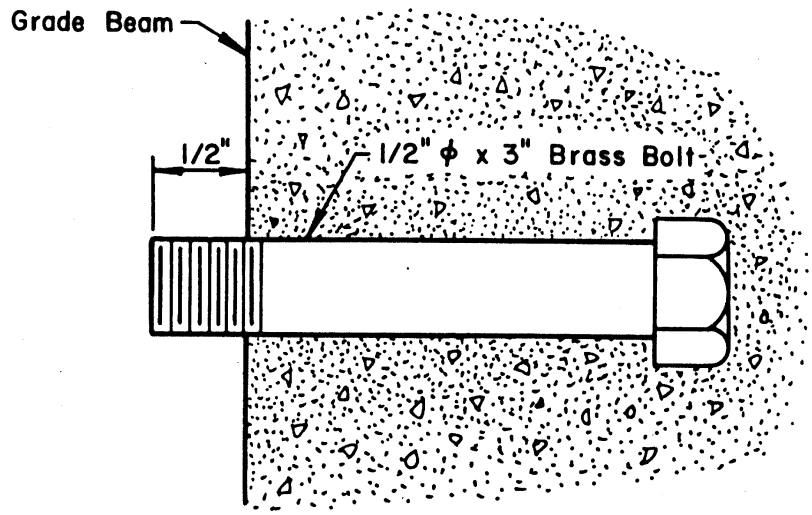

Note :

Install Bench Mark In Grade Beam Approx. 6" Above Finish Grade, Where Shown On Plan. After Forms Are Stripped Obtain and Furnish to the Contracting Officer Elevations, to the Nearest 1/100 of a Foot. Prior to Final Building Acceptance, Obtain and Furnish to Contracting Officer an Additional Set of Bench Mark Elevations.

Indicate Location of Bench Marks On Foundation Plan (at Footings). Provide 3 Per Side of Building, One Each Corner and One at Centerline of Building. Provide Additional Bench Marks to Limit Spacing to Max. of 50 ft. On Center For Long Sides.

Bench Marks Shall Be Provided In Areas Where Expansive Soil Conditions Are Encountered, Such As San Antonio ("Special Design" Locations)

Figure 25. Bench mark detail.

8 LANDSCAPING

The engineer responsible for foundation design should contact the landscape planner prior to preparation of the landscaping plans. Only trees and a minimum number of shrubs should be included in the plans. All planting within 14 ft of the building foundation should be removed. In landscaping the building the following alternatives should also be considered.

- The use of gravel blankets on waterproof polyethylene strips approximately 14 ft wide adjacent to the building foundation.

- The use of desert-type plants within the area adjacent to the building foundation. These plants have lower moisture requirements and will require minimum watering once they become established.

- The use of boulders and other decorative stone in lieu of plants.

9 INSPECTION

Foundation engineers should visit the site of each structure during drilling of the first pier holes to verify the foundation design. The intent in placing the footings should be emphasized at the time of the first visit, and the inspectors should be cautioned to insure that the intent of the design is accomplished in the construction. Water should be kept out of pier holes during construction. Visits should also be made to the site by structural engineers during construction. The importance of some details may not be apparent to construction inspectors and, consequently, may not be rigidly enforced. During the visits these details should be brought to the attention of the construction inspector.

10 EXCEPTIONS

Exceptions to the above criteria will necessarily result due to shortage of funds, differences in foundation sites, and unusual structures. Exceptions should be discussed at the concept or early preliminary design stage and resolved at that time.

11 CONCLUSION

Expansive soils can cause severe structural distress to buildings unless proper criteria are applied to the building design. This distress can consist of (1) heaving of slabs-on-grade, (2) cracks in grade beams, (3) cracks in walls, (4) cracks in pier shafts, and (5) failure of concrete plinths. The criteria presented herein have been developed by the Southwestern Division, and have been successfully applied in areas where expansive soils had formerly caused distress and damage to the majority of buildings.

APPENDIX A: INTERACTION OF SWELLING CLAYS AND REINFORCED CONCRETE PIERS

Purpose. Mathematically derived values for uplift transmitted from swelling soils to deeply embedded drilled and underreamed concrete footings, both from the standpoint of skin friction and from base pressure, are necessary to evaluate the stability of a structure supported by this type of foundation. A method of deriving these values, which is compatible with established soil mechanics theories, is presented herein. The data used to derive these values may be obtained from recognized laboratory soils tests.

Scope. This appendix will cover only the magnitude of forces transmitted by the swelling soil to the structural component. It will be assumed that the amount of movement (swell) experienced by the soil is at least that amount required to fully mobilize its shear strength and that the steel reinforcing in the pier shaft is sufficient to prevent rupture of the shaft. An attempt to define the total amount of upward movement which could be expected is outside the scope of this appendix.

Recognized Design Procedures. Procedures for determining uplift on deeply embedded, cast-in-place, concrete piling are notable for their scarcity. A review of available literature disclosed one example of a method by which uplift on a shaft could be determined.[19] The method consists of multiplying the surface area of the shaft by the shear strength of the surrounding soil. Although which shear strength is not clearly identified, cohesion as determined by the unconfined compressive strength is inferred.

Physical Conditions. Several conditions may be envisioned when considering the action of a swelling soil on a drilled and underreamed footing. A condition might arise in which a portion or all of the shaft is in a zone undergoing moisture change with the belled portion of the footing being embedded in a stable stratum. Another condition that may be encountered is one in which the entire footing is within a zone undergoing moisture change. Also, the lateral extent of the swelling zone may vary from one immediately adjacent to the footing to an area encompassing quite a large volume of soil and affecting several footings. Obviously, the most adverse condition, which will cause the most distress to the structure, is when both the shaft and the bell of one footing are located within the zone undergoing maximum swell—i.e., the extent of swelling mass is sufficient to mobilize all the available swelling and shearing forces, and an adjacent pier is in a zone of lesser swell. This study was directed at analyzing the most adverse condition; however, conditions where partial embedment in swelling soils exists could be similarly analyzed.

Shear Strength. It has been demonstrated that the available shear strength of a clay shale-concrete interface in a saturated condition is closely related to the drained shear strength in terms of φ and C.[20] The unconfined compressive strength (cohesion) of a desiccated soil is dependent upon intergranular stresses arising, to a large extent, from negative pore pressures. As the soil imbibes water and swells, this negative pressure increases toward zero with a corresponding reduction in the shear strength. It is then evident that the appropriate value of shear to be used in determining maximum potential shear stress would be the soil strength at the condition where pore pressure approaches equilibrium and the normal stress becomes equal to the effective overburden pressure. Laboratory tests which simulate this condition are commonly called consolidated-drained tests, where the shear strength is dependent upon the applied stress (acting) normal to the failure plane.

Other values of shear strength, determined by such standard laboratory tests as the unconsolidated-undrained and consolidated-undrained tests, were considered for use in determining the maximum potential uplift. Both of these strength parameters are probably effective for some period of time during the early stages of swelling of the soil. But because they represent somewhat transitory conditions and are not active along the entire pier shaft or within the entire zone of swelling at any given time, they were considered to represent conditions where less pressure or movement was being applied to the pier shaft.

[19] J. V. Parcher and R. E. Means, *Soil Mechanics and Foundations* (Charles E. Merrill Publishing Co., 1968).

[20] *Report of Field Shear Tests* (U.S. Army Engineer District, Fort Worth, August 1961).

Recommended Method of Analysis. Let it be assumed that at some depth below the ground surface a particle of soil with an unsatisfied moisture condition is expanding as shown in Figure 26a. Then the vertical pressure is equal to the weight of the column of soil lying above the particle. Assuming the horizontal and vertical expansion pressures exceed the overburden pressure and the soil is attempting to swell horizontally as well as vertically (which would be the case), then the stresses on the soil can be expressed in terms of overburden pressure and the shear strength components φ and C as shown in Figure 26b. The equations shown below Figure 26b are the mathematical solutions for the major and minor principal stresses acting on the soil particle. As shown in Figure 26a, the horizontal stress acting on the soil particle will also represent the maximum contact pressure between the pier shaft and the surrounding soil. This being so, then the maximum potential unit uplift between the pier shaft and the soil is equal to the contact pressure times the friction angle of the soil and the total uplift, or tension, transmitted to the shaft at depth z is equal to the summation of all unit uplift values above depth z. It should be noted that the strength component C is not considered effective at the soil-shaft interface because the interface is not an intact surface, having been disturbed during the drilling of the pier hole. It is possible that lateral swelling pressure could be greater than that resulting from overburden pressures, and even though good correlation is shown with field tests, different uplift stresses may be possible at different time intervals and in other areas.

Typical subsurface profiles at Lackland Air Force Base can be taken as:

Stratum	Depth	Type Material	Shear Strength
1	0-8 ft	Expansive CH clay	$\varphi = 20°$, c = 0
2	8-12 ft	Nonexpansive GC gravel	$\varphi = 30°$, c = 0
3	12+ ft	Expansive clay shale (Midway Formation)	$\varphi = 10°$, c = 1 TSF*
			$\varphi = 10°$, c = 0**
		or	
3	12+ ft	Expansive clay shale (Navarro Formation)	$\varphi = 35°$, c = 0*
			$\varphi = 20°$, c = 0**

*Intact shear strength: test data from direct shear tests conducted on undisturbed ½-in. thick specimens sheared at 0.0001 in./min.

**Residual shear strength: test data from direct shear tests conducted on presplit specimens sheared at 0.0001 in./min.

Using the typical profiles and shear strengths, an accumulation of uplift acting on pier shafts of 18 and 30 in. in diameter for an area having the Midway as primary geological formation is shown in Figure 27, and for an area having the Navarro formation is shown in Figure 28.

Field Test Comparison. Two of the test piers in the recent field test at Lackland Air Force Base have configurations similar to that used in the analysis. Test Pier 1 is 18 in. in diameter and is bottomed some 34 ft below the ground surface. Test Pier 2 is 30 in. in diameter, bottomed approximately 35 ft below the ground surface. The subsurface profile is the same as has been used in developing Figure 26, and the primary geologic formation is the Midway formation. Pier No. 1 was reinforced with 5.0 in.^{2} of steel and Pier No. 2 had 6.57 in.^{2} The amount of strain developed in the steel reinforcing in the test piers was measured at several points along the length of the shaft. This strain has been converted to tension and plotted with respect to depth, as shown in Figures 29 and 30. Also shown in these figures are the amounts of tension (uplift) computed by the method outlined in Figure 26. Recognizing the inexactitude with which the shear strength of a soil deposit can be determined and the transitory nature of shear strength as conditions change from an intact to a residual condition, it is believed that the field tests correlate sufficiently with predicted values to reinforce the theoretically developed method, however, different pressures may be possible with time and in other areas.

Base Pressure Uplift. Not only must the load on the shaft and the reinforcing within the shaft be able to withstand the tensile forces arising from uplift and skin friction, but also, for the pier to remain stable, the load transmitted to the base of the shaft must be able to withstand any swelling tendency of the foundation material below the bottom of the shaft. The difficulty in achieving this situation is demonstrated in Figure 31. The load transmitted to the bottom of a circular footing is carried by a mass of soil having a shape somewhat related to a truncated cone. Just beneath the footing the load is carried by an area of soil having the same size as the footing and the average unit soil pressure is practically equal to the load transmitted divided by the area of the footing. If it is assumed that the sides of the cone are sloped at 60° from the horizontal (an assumption which does no great injustice to Boussinesq or

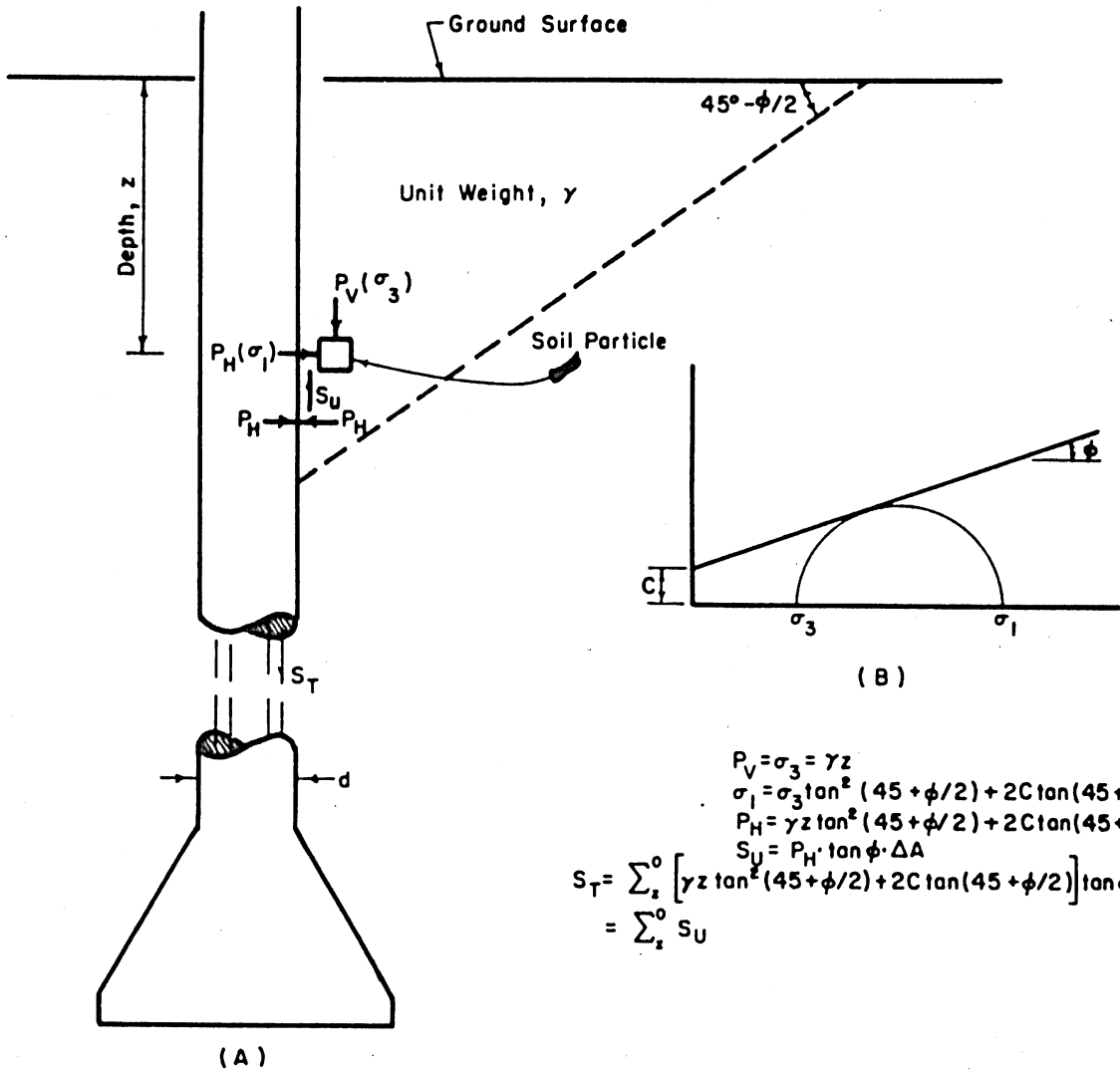

$$P_V = \sigma_3 = \gamma z$$
$$\sigma_1 = \sigma_3 \tan^2(45 + \phi/2) + 2C\tan(45 + \phi/2)$$
$$P_H = \gamma z \tan^2(45 + \phi/2) + 2C\tan(45 + \phi/2)$$
$$S_U = P_H \cdot \tan\phi \cdot \Delta A$$
$$S_T = \sum_z^0 \left[\gamma z \tan^2(45 + \phi/2) + 2C\tan(45 + \phi/2)\right]\tan\phi \cdot \Delta A$$
$$= \sum_z^0 S_U$$

σ_1 = Major Principal Stress
σ_3 = Minor Principal Stress
P_V = Vertical Pressure
P_H = Horizontal Pressure
γ = Unit Weight
z = Depth
ϕ = Friction Angle
C = Cohesion
S = Skin Friction

Figure 26. Method of analysis.

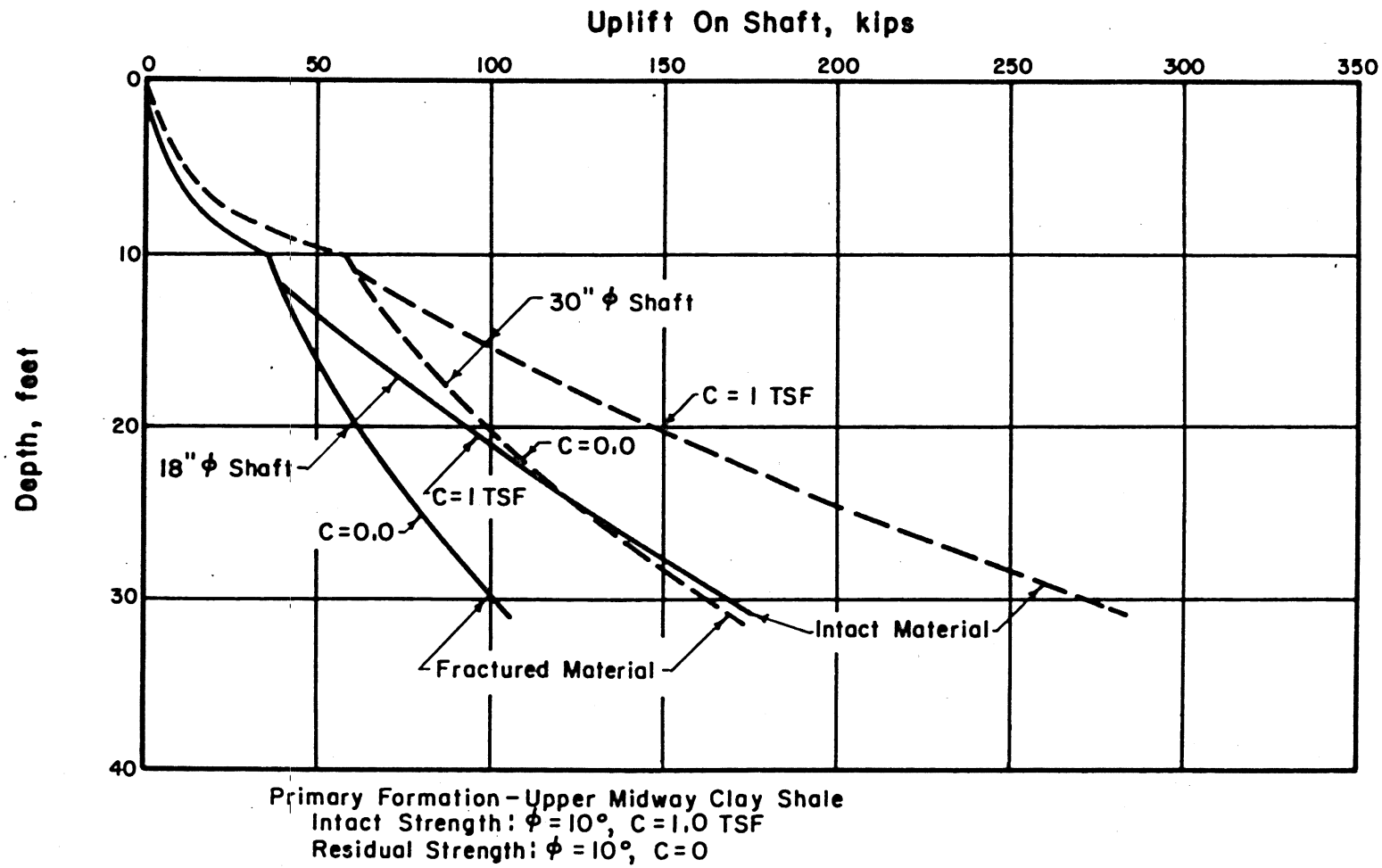

Figure 27. Uplift force on pier shafts in the midway formation.

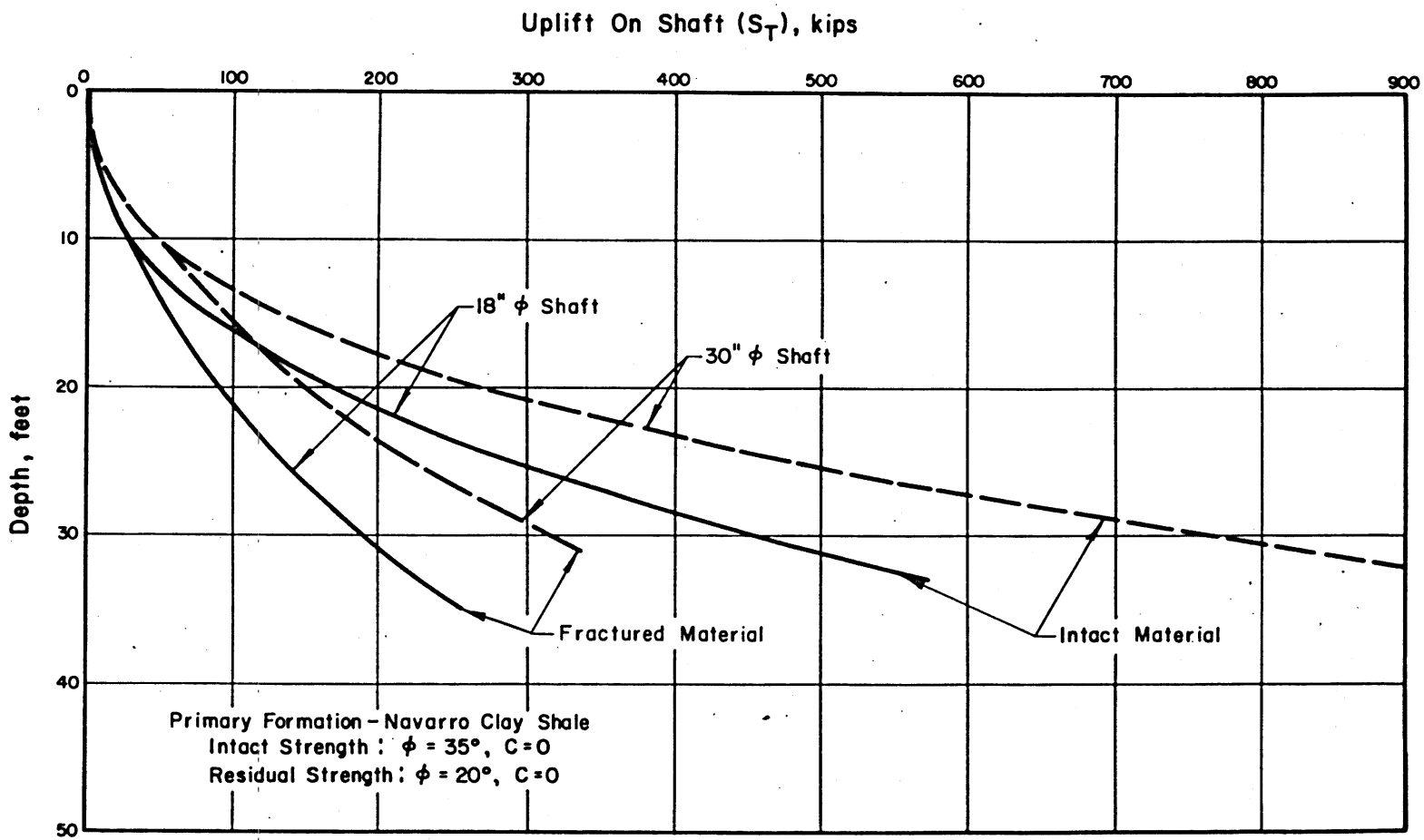

Figure 28. Uplift force on pier shafts in the navarro formation.

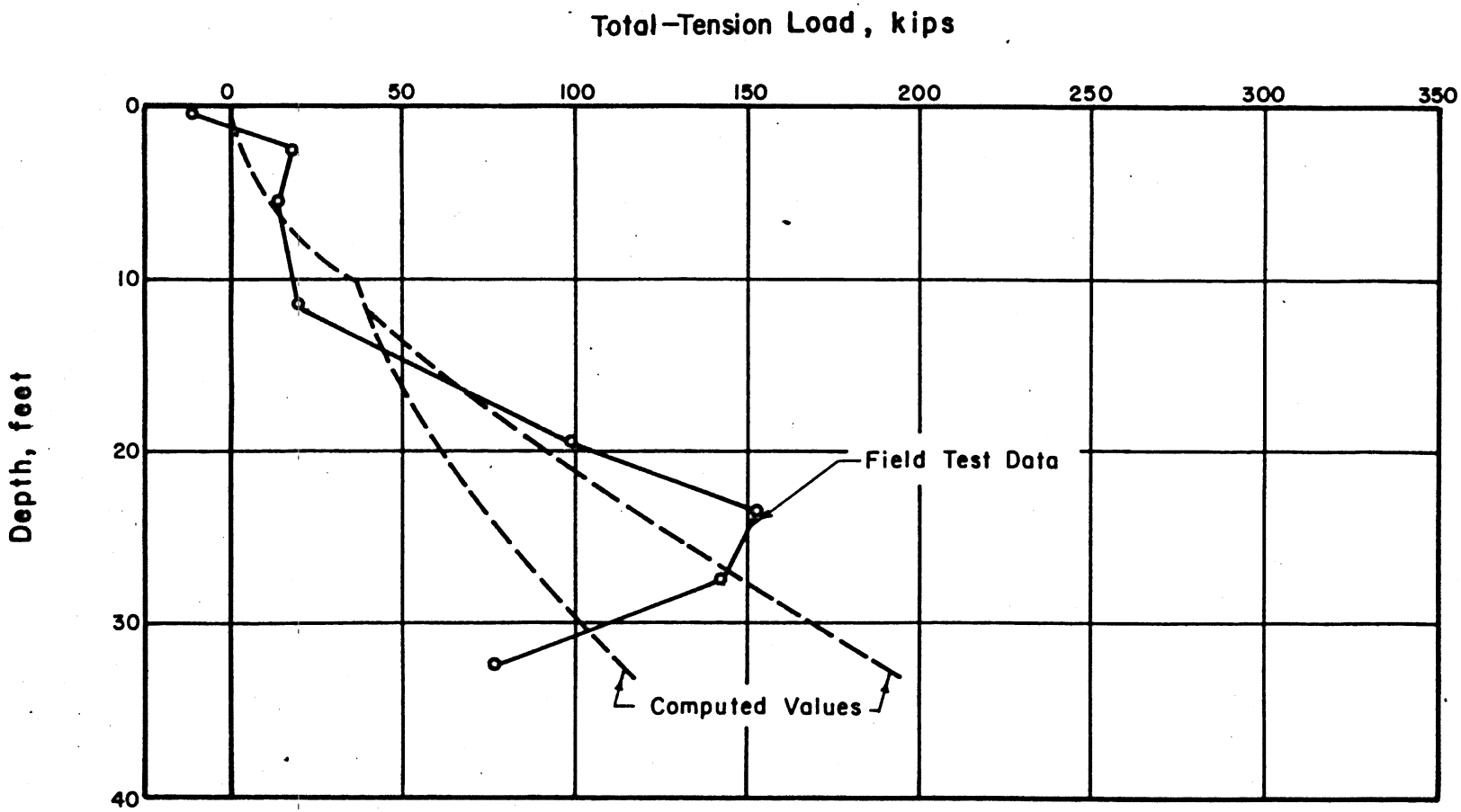

Figure 29. Total tension load vs. depth, pier no. 1 Lackland Air Force Base.

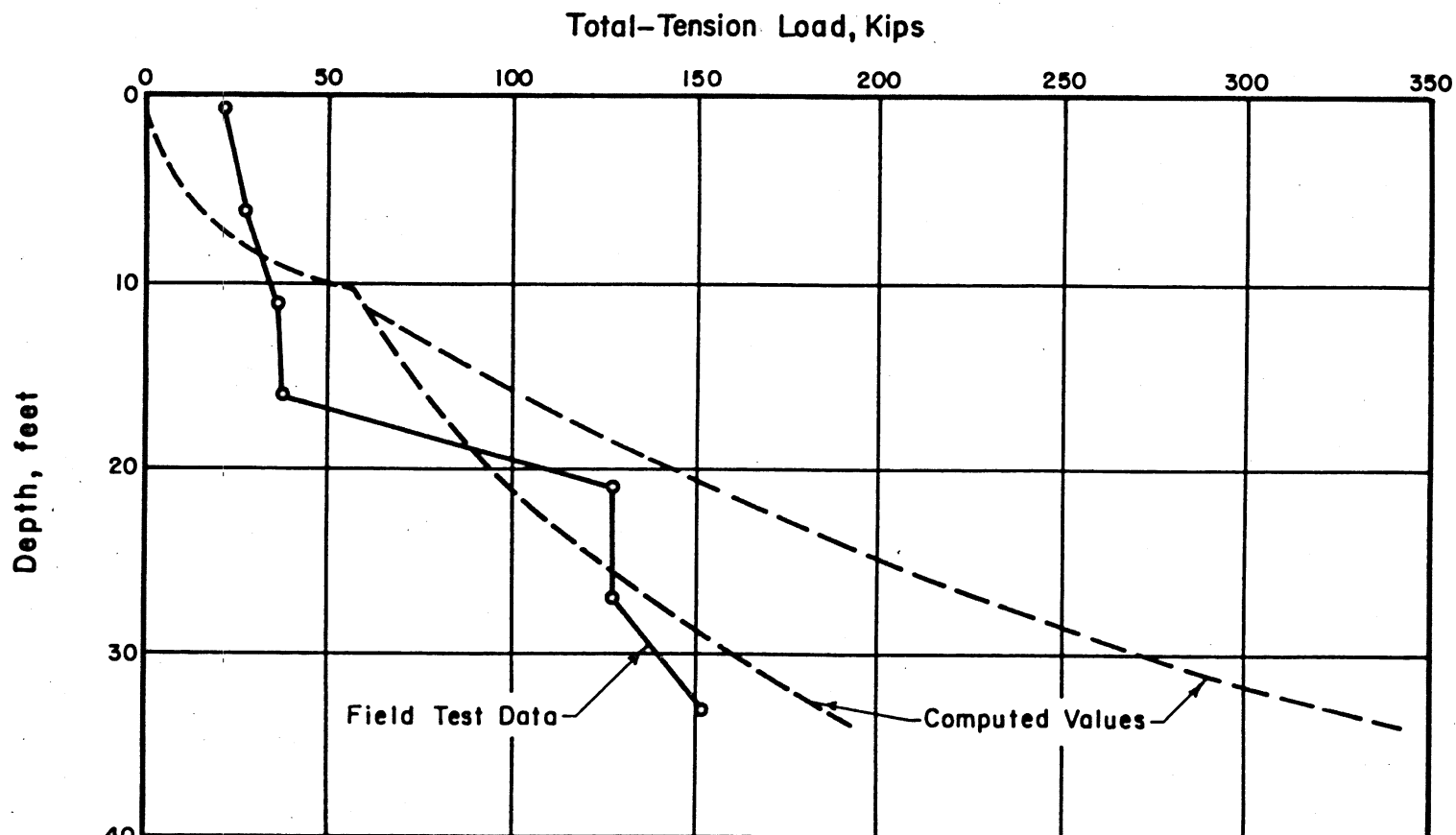

Figure 30. Total tension load vs. depth, pier no. 2 Lackland Air Force Base.

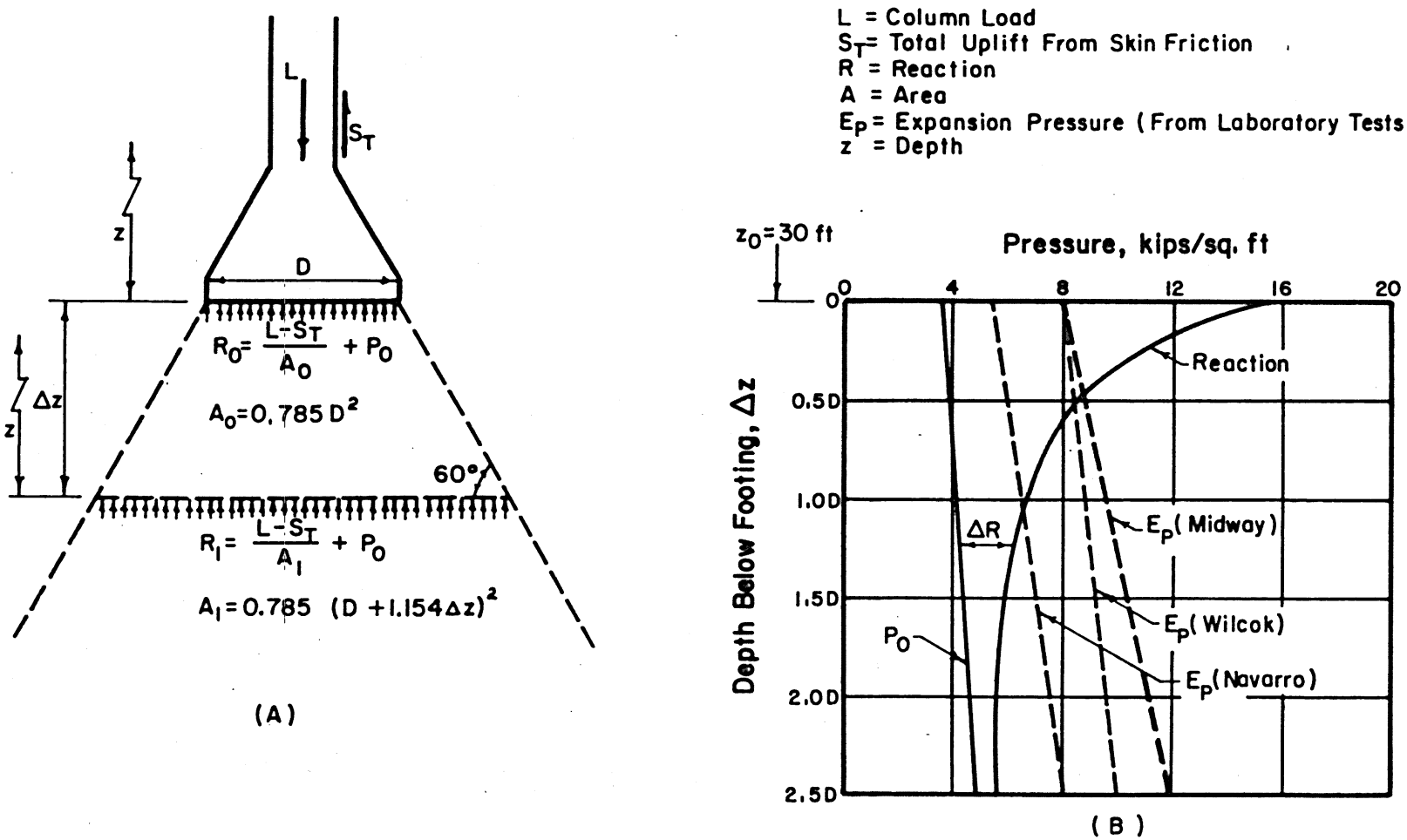

Figure 31. Base pressure uplift.

Westergaard and others), then the unit pressure at depth Δz below the base of the footing can be determined by dividing the total load by the cross-sectional area of the cone at depth Δz. As shown in Figure 31b the reaction at a depth of one footing diameter below the base of the footing is only a small fraction of the applied load. Also shown in this figure are expansion pressures versus depth curves developed by laboratory tests for three geological formations commonly found in the San Antonio, Texas area. The load indicated as acting on the soil at the bottom of the footings is commonly used as the allowable bearing pressure for these materials and includes an adequate factor of safety against failure in shear; not accounting for skin friction. It can be seen that the upward force exhibited by the expansive material lying below the base of the footing can easily exceed the combined load on the soil at very short distances below the base of the footing. Even doubling the applied unit load would have a minor effect at depths greater than 1.0 to 1.5 diameters below the base of the footing. Doubling the load would in effect reduce the factor of safety and, in the absence of the swelling phenomena, could cause detrimental settlement.

Conclusions. As a result of this study it is concluded that the tension forces which may be exerted on deeply embedded pier shafts can be predicted from laboratory tests results. Also, these tension forces may be within the limits which can be resisted with reinforcing steel. However, depending upon the strength of the soil and the size of the pier shaft, the uplift can become quite large. For example, an 18-in. diameter shaft embedded in intact Navarro material would be subjected to 530 kips tension at 32 ft below the ground surface. Assuming a column load of 100 kips, then the net tension to be resisted at that depth would be equal to 430 kips. With an allowable stress in the steel of 60 ksi, this would require approximately 7 in.^{2} of steel or 2.75 percent. A 30-in. diameter shaft would require approximately 13 in.^{2} of steel, or approximately 2 percent. This amounts to approximately 25 and 40 lbs of steel per ft of shaft; not an inconsiderable amount.

Even when the pier shaft is adequately reinforced to resist the tension, the problem of expansion below the base of the footing remains to be solved. It has been demonstrated in Figure 31 that, for typical San Antonio foundation materials, the footing can be loaded to the point of failure and still be deficient in load necessary to restrain upward movement. If the amount of potential movement is estimated to be sufficient to cause structural disturbance to a building, then the design engineer must choose a type of foundation which will not upset the moisture regime of the expansive material. The most drastic change in the moisture regime that can be effected is by drilling holes into the expansive soil and thereby creating entrances for surface water or water contained in perched water tables. The least drastic change would be that of removing the expansive surface material and keeping disturbance of the deeper lying expansive material to a minimum. Until a method is devised that will ensure that water cannot reach the expansive material, or a method by which the expansive characteristics of a material can be nullified, then design efforts should be directed toward achieving the least drastic change in moisture regime.

REFERENCES

Bjerrum, L., "Progressive Failure in Slopes of Overconsolidated Plastic Clay and Clay Shales," *Journal of Soil Mechanics and Foundations Division*, ASCE, Vol 93, No. SM5 (September 1967), pp 1-50.

Building Foundations in Expansive Clays, Vols 1 and 2 (U.S. Army Engineer District, Fort Worth, April 1968).

Chuang, J. W., and L. C. Reese, *Studies of Shearing Resistance Between Cement Mortar and Soil* (Center for Highway Research, The University of Texas at Austin, May 1969).

Heley, W., and B. N. MacIver, *Engineering Properties of Clay Shales*, Report 1, Development of Classification Indexes for Clay Shales, Technical Report S-71-6 (U.S. Army Engineers Waterways Experiment Station, June 1971).

Jasper, J. L., and V. W. Shtenko, "Foundation Anchor Piles in Clay Shales," *Canadian Geotechnical Journal*, Vol 6, No. 2 (1969), pp 159-174.

Jennings, J. E., "The Prediction of Amount and Rate of Heave Likely to be Experienced in Engineering Construction on Expansive Soils," *Proceeding, Second International Conference on Expansive Soils* (Texas A&M University, 1973).

Parcher, J. V., and R. E. Means, *Soil Mechanics and Foundations* (Charles E. Merrill Publishing Co., 1968).

Ranganatham, B. V., and B. Satyanarayana, "A Rational Method of Predicting Swelling Potential for Compacted Expansive Clays," *Proceedings, Sixth International Conference on Soil Mechanics and Foundation Engineering,* Vol 1 (Toronto, 1965), pp 92-96.

Report on Field Shear Tests (U.S. Army Engineer District, Fort Worth, August 1961).

Seed, H. B., R. J. Woodward, and R. Lungren, "Clay Mineralogical Aspects of the Atterberg Limits," *Journal of the Soil Mechanics and Foundations Division,* ASCE, Vol 90, No. SM4 (July 1964), pp 1o7-131.

Skempton, A. W., "The Colloidal 'Activity' of Clays," *Proceedings, Third International Conference on Soil Mechanics and Foundation Engineering,* Vol 1 (Switzerland, 1953), pp 57-61.

Sullivan, R. A., and B. McClelland, "Predicting Heave of Buildings on Unsaturated Clays," *Proceedings, Second International Conference on Expansive Soils* (Texas A&M University, 1973).

Young, R. M., and B. P. Warkentin, *Introduction to Soil Behavior* (The MacMillan Company, 1966), p 279ff.

CERL DISTRIBUTION

Chief of Engineers
ATTN: DAEN-ZS
ATTN: DAEN-MCZ-S (2)
ATTN: DAEN-ASI-L
Department of the Army
WASH DC 20314

Chief of Engineers
ATTN: CWZ-R (3)
ATTN: CWR-R (2)
Department of the Army
WASH DC 20314

Department of Mechanics
U.S. Military Academy
West Point, NY 10996

The Engineering School
Technical Information Br.
Archives Section (Bldg 270)
Ft Belvoir, VA 22060

USA Engineering School
ATTN: ATSEN-DT-LD (2)
Ft Belvoir, VA 22060

Director
USA Cold Regions Research
Engineering Laboratory
PO Box 282
Hanover, NH 03755

Director, USA-WES
ATTN: Concrete Div
ATTN: Soils Div
ATTN: Library
PO Box 631
Vicksburg, MS 39181

Deputy Chief of Staff
for Logistics
US Army, The Pentagon
WASH DC 20310

Assistant Chief of Staff
for Intelligence
US Army, The Pentagon
WASH DC 20310

The Army Library
Office of the Adjutant
General
Room 1A530, The Pentagon
WASH DC 20315

HQDA (SGRD/Chief),
Sanitary Engr Br
WASH DC 20314

Department of the Army
ATTN: EACICT-P
HQ I Corps (Group)
APO San Francisco 96358

Commander-in-Chief
US Army, Europe
ATTN: AEAEN
APO New York, NY 09403

Chief, Naval Facilities
Engineering Command
ATTN: Chief Engineer
Department of the Navy
WASH DC 20350

Chief, Naval Operations
ATTN: The Library
Department of the Navy
WASH DC 20360

Chief, Hydrographic Office
ATTN: The Library
Department of the Navy
WASH DC 20360

Chief
Naval Air Systems Command
ATTN: The library
Department of the Navy
WASH DC 20360

Naval Civil Engineering Lab
Technical Library Code L31
Port Hueneme, CA 93043

CPT E. M. Saunders
Commanding Officer
Naval Civil Engineering
Laboratory
Port Hueneme, CA 93041

AF Civil Engr Center/DE
Tyndall AFB, FL 32401

AFWL/Civil Engr Div
Kirtland AFB, NM 87117

AF/PREE
Bolling AFB, DC 20332

AF/RDPQ
WASH DC 20330

Each Division Engineer
US Army Engr Div
ATTN: Library
ATTN: Chief, Engr Div

Each District Engineer
US Army Engr District
ATTN: Library
ATTN: Chief, Engr Div

Defense Documentation
Center
ATTN: TCA (12)
Cameron Station
Alexandria, VA 22314

Chief, Airports Standard
Div-AS58
Federal Aviation Administration
800 Independence Ave SW
WASH DC 20553

Office of Management Svc,
MS 110 - FAA
800 Independence Ave SW
WASH DC 20553

Highway Research Board
National Research Council (3)
2101 Constitution Ave
WASH DC 20418

Dept of Trans Library
Acquisitions Section (SR)
TAD-491.1
400 7th Street SW
WASH DC 20590

Engineering Societies Library
345 East 47th Street
New York, NY 10017

Library of Congress (2)
Exchange and Gift Div
ATTN: American & British
WASH DC 20540

Superintendent of Documents
Div of Public Documents
ATTN: Library (2)
US Govt Printing Office
WASH DC 20402

Commanding General
USA Engr Command, Europe
APO New York, NY 09403

Engineer
US Army, Alaska
APO Seattle, WA 98749

Commanding Officer
USACDC Engineer Agency
Ft Belvoir, VA 22060

Bldg Research Advisory Board
National Academy of Sciences
2101 Constitution Avenue
WASH DC 20418

Air Force Weapons Lab
Technical Library (DOUL)
Kirtland AFB, NM 87117

Commanding General, 1st USA
ATTN: Engineer
Ft George G. Meade, MD 20755

Commanding General, 3rd USA
ATTN: Engineer
Ft McPherson, GA 30330

Commanding General, 5th USA
ATTN: Engineer
FT Sam Houston, TX 78234

Commanding General, 6th USA
ATTN: Engineer
Presidio of San Francisco, CA 94129

Plastics Technical Evaluation
Center
ATTN: SMUPA-VP3
Picatinny Arsenal
Dover, NY 07801

Institute of Defense Analysis
400 Army-Navy Drive
Arlington, VA 22202

Defense Logistics Studies Infor-
mation Exchange (2)
U.S. Army Logistics Management Center
Fort Lee, Virginia 23801

COL William B. Liddicoet
Chief, Civil Engineering Research
Division
Air Force Weapons Lab AFWL/DE
Kirtland AFB, NM 87117

Coastal Engineering
Research Center
Kingman Bldg
ATTN: Library
Ft. Belvoir, VA 22060

Dept of the Army
HQ 15th Engineer Battalion
9th Infantry Division
Ft. Lewis, WA 98433

Main Library, Documents
Section
State University of
New York at Stony Brook
Stony Brook, NY 11790

W. N. Lofroos, P.E.
Chief, Bureau of Planning
Dept of Transportation
605 Suwannee St.
Tallahassee, FL 32304

Dept of the Army
U.S. Army Human Engr Lab
ATTN: AMZHE/J. D. Weisz
Aberdeen Proving Ground,
MD 21005

Naval Facilities Engineering
Command
ATTN: Code 03
200 Stovall St.
Alexandria, VA 22332

Chief of Engineers
ATTN: DAEN-MEZ-S (11)
Dept of the Army
WASH DC 20314

For forwarding to:

Commander, Army Staff (5)
British Joint Srvcs Mission
Main Navy Building
WASH DC 20360

Canadian Liaison Officer
ATTN: Security Officer (2)
c/o Engr Research and
Development Laboratories
Ft. Belvoir, VA 22060

Canadian Joint Staff (2)
2450 Massachusetts Ave NW
WASH DC 20008

Chief
Construction Engineer
Air Service Branch
Department of Transport
Ottawa, Ontario, Canada

Div of Bldg Research
National Research Council
Montreal Road
Ottawa, Ontario, K1A0R6