SR 198

Dr. Merritt

Special Report 198

EXPEDIENT SNOW AIRSTRIP CONSTRUCTION TECHNIQUE

E.F. Clark, G. Abele and A.F. Wuori

December 1973

PREPARED FOR
DIRECTORATE OF MILITARY ENGINEERING
OFFICE, CHIEF OF ENGINEERS
DA PROJECT 4A062103A894
BY
CORPS OF ENGINEERS, U.S. ARMY
COLD REGIONS RESEARCH AND ENGINEERING LABORATORY
HANOVER, NEW HAMPSHIRE

EXPEDIENT SNOW AIRSTRIP CONSTRUCTION TECHNIQUE

E.F. Clark, G. Abele and A.F. Wuori

December 1973

PREPARED FOR
DIRECTORATE OF MILITARY ENGINEERING
OFFICE, CHIEF OF ENGINEERS
DA PROJECT 4A062103A894
BY
CORPS OF ENGINEERS, U.S. ARMY
COLD REGIONS RESEARCH AND ENGINEERING LABORATORY
HANOVER, NEW HAMPSHIRE

PREFACE

This report was prepared by Mr. Elmer F. Clark, Chief, Alaskan Division; Mr. Gunars Abele, Research Civil Engineer, Applied Research Branch; and Mr. Albert F. Wuori, Chief, Applied Research Branch, Experimental Engineering Division.

The report is published under DA Project 4A062103A894, *Engineering in Cold Environments*, Task 02, *Engineering Design Criteria*, Work Unit 001, *Expedient Roads, Airfields and Heliports in Cold Regions*. The report, prepared in response to current requirements of troop units operating in Alaska, summarizes pertinent information on expedient Army snow runway construction procedures, extracted from previous reports dealing with snow road and runway construction methods of a broader scope, and reflects the personal experiences and observations of the authors.

Dr. Malcolm Mellor, Applied Research Branch, technically reviewed this report. Second Lieutenant James E. Pope prepared drawings of the designs for both the drag tooth harrow and the corrugated roller.

The contents of this report are not to be used for advertising, publication, or promotional purposes. Citation of trade names does not constitute an official endorsement or approval of the use of such commercial products.

Manuscript received 6 April 1973.

CONTENTS

ILLUSTRATIONS

EXPEDIENT SNOW AIRSTRIP CONSTRUCTION TECHNIQUE

by

E.F. Clark, G. Abele and A.F. Wuori

Introduction

Although a great amount of research and development effort has been devoted to compaction of snow runways during the past 20 years by various elements of the Army, Navy, and Air Force, most of these efforts have involved use of modified commercial items of equipment not available to engineer troop units. These items included various types of snowplows, rotary earth tillers, and snow leveling devices. The literature produced by these investigations does not provide simple methods, techniques, or procedural guidance suitable for use by Army field units.* However, the data resulting from past research do provide the knowledge necessary to develop procedural guidance that will permit an engineer unit to compact snow runways successfully with its own equipment, augmented by additional items that can be improvised in the field. The following discussion provides this guidance and outlines expedient step-by-step procedures.

The basic mechanism of increasing the strength of snow

Snow strength increases with an increase in density and a decrease in temperature. The strength characteristics of a snow layer also increase with time due to growth of bonds between individual snow grains, except in certain special situations. This process of sintering, or age hardening, can be accelerated considerably by mechanical agitation or disaggregation, which results in an increase in snow density because of an increase in specific surface area, a more nonuniform particle size distribution and, therefore, a more intimate grain-to-grain contact (Fig. 1). A further increase in density and a more pronounced bond growth can be achieved by additional compaction immediately after disaggregation.

The rate of age hardening increases with an increase in temperature (below freezing). However, snow which is age hardening at a lower temperature and, therefore, at a slower rate, will ultimately reach a higher strength, although the time period required for completing the age hardening process is longer than that at higher temperatures (Fig. 2).

The disaggregation and compaction processes are more effective if performed at higher temperatures (below freezing) and will result in a higher initial rate of hardening. After that, however, lower temperatures are desirable to achieve a higher ultimate strength.

Construction equipment

The following items of equipment are suitable for snow runway construction.

---

*Various snow pavement construction techniques, utilizing several types of equipment, in both the Arctic and Antarctic, have been summarized by Wuori (1963), Abele et al. (1968) and Moser (1962, 1964).

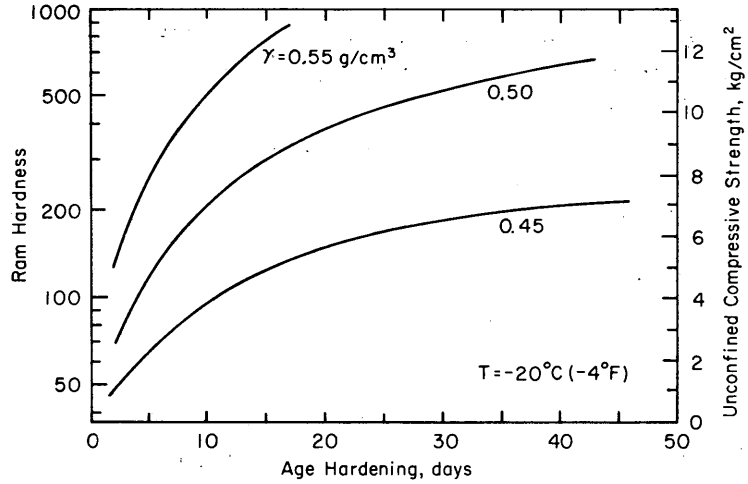

Figure 1. Strength as a function of time with density as a parameter.

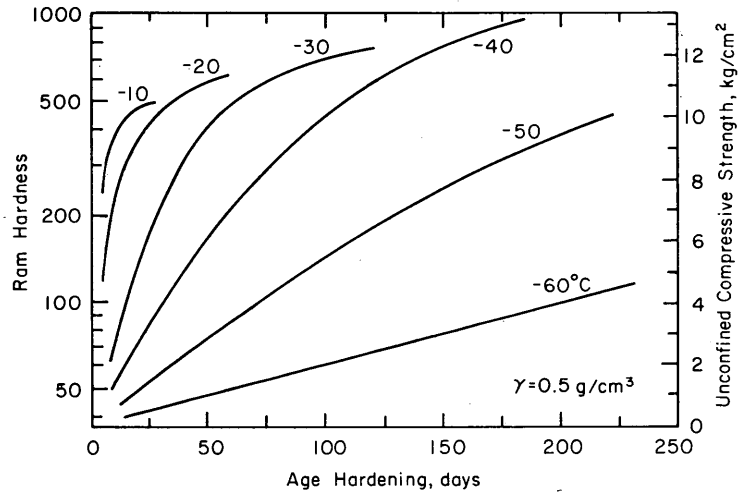

Figure 2. Strength as a function of time with temperature as a parameter.

Disaggregation:

Peg-toothed A-frame harrow (Fig. 3)*

Compaction:

D-7 or D-8 bulldozer (can also be used for rough leveling)
Tracked vehicles (M-113, M-116)
Corrugated towed roller (Fig. 4)

Leveling, grading:

Motorized road grader
Drags (Fig. 5, 6)

*The harrow can be constructed so that, by turning it over, it can also be used as a drag.

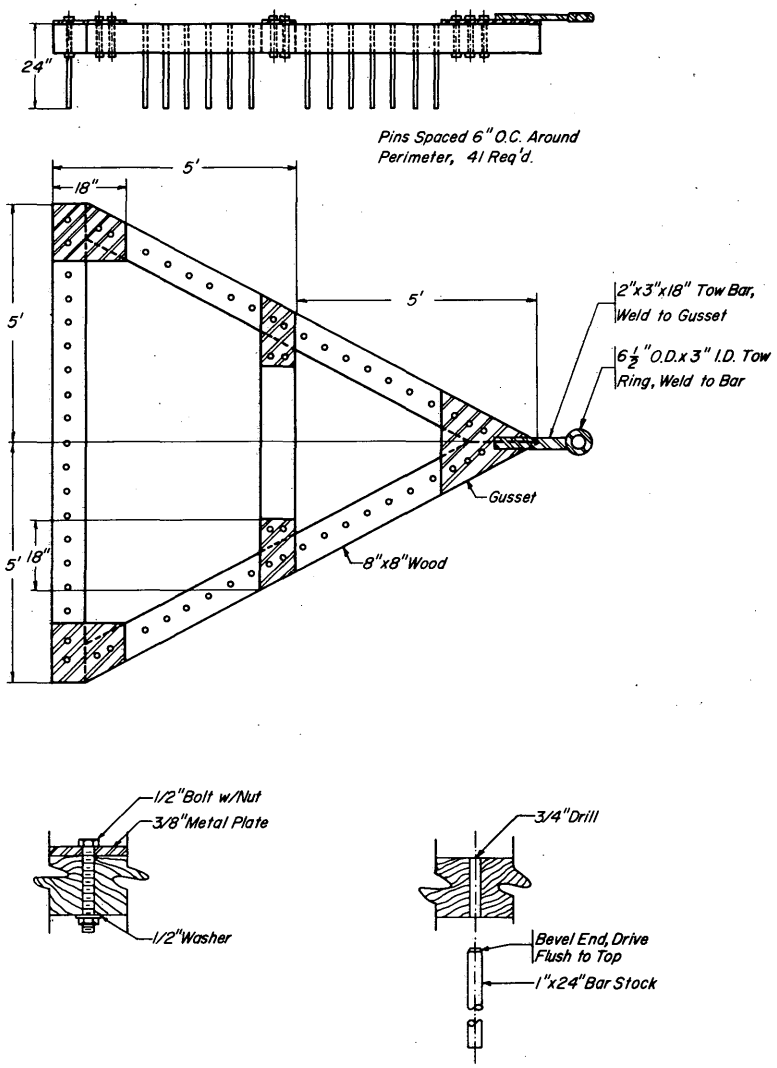

Figure 3. Peg-tooth A-frame harrow.

Other:

Dump truck (if snow must be hauled)
Front-end loader (if snow must be hauled)
Surveyor's level.

Site selection and layout

Site selection is of vital importance. No amount of compaction effort will produce a satisfactory snow runway if the site is unsuitable. Areas with little or no vegetation are preferable. The site must be level, except for minor surface roughness. Under no circumstances should it contain ditches more than 2 ft in depth. The slope must not exceed that specified for combat airfield runways. The site should be clear of trees or other vegetation more than about 2 ft in height. In permafrost areas care should be taken not to remove too much vegetation which might cause degradation of the underlying permafrost in subsequent years. It must be clear of natural or man-made vertical obstructions at either end of the proposed runway that would pose a hazard to safe landings and takeoffs. And it must be sufficiently large to permit construction of a runway long enough to accommodate the aircraft that will utilize it. In the above considerations, the provisions of FM 5-34 are applicable.

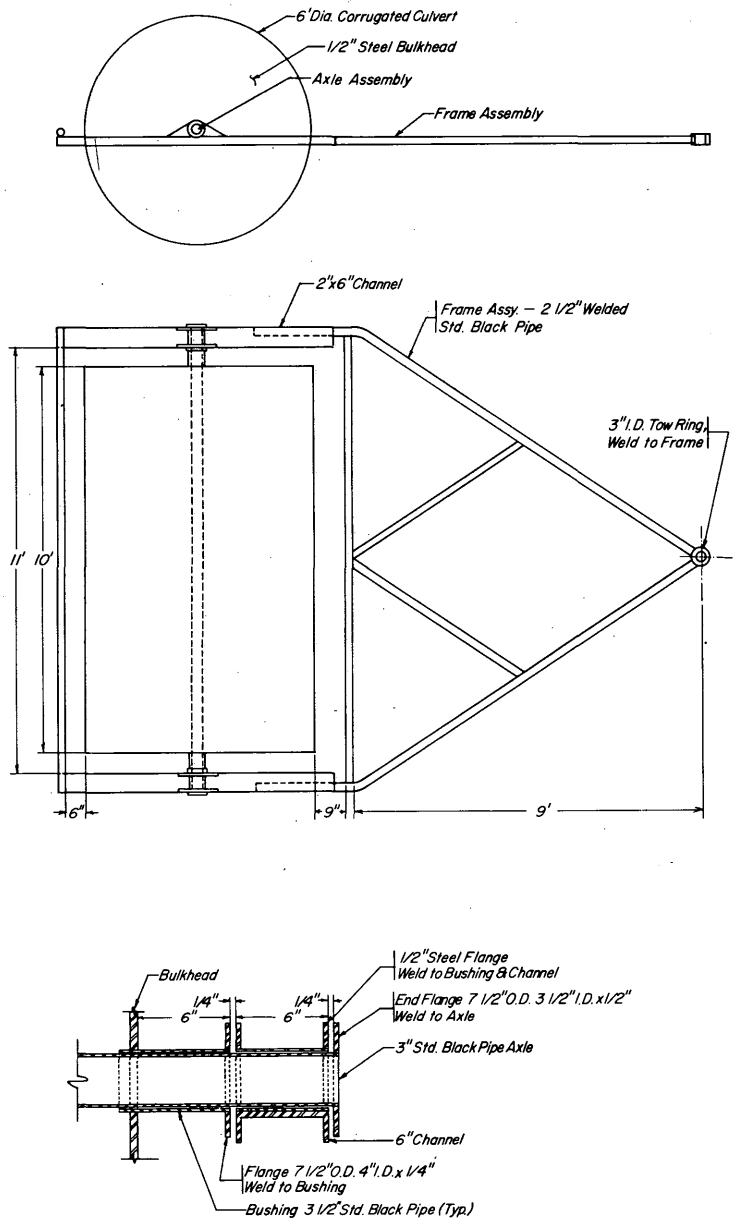

Figure 4. Corrugated roller.

The runway should be oriented so that the long axis is parallel to the prevailing wind direction. However, some consideration should be given also to storm wind direction, which can be at an angle to the prevailing wind. It is not desirable to have any protruding features such as surface relief, trees or shrubs close to and on the windward side of the runway, since these may cause potential drifting problems. If meteorological data for the area are not available, some idea of wind directions can be obtained by observing snowdrift patterns. (It may sometimes be difficult to distinguish snow surface features caused by storm winds from those caused by the prevailing winds.) Layout plans should include provisions for aircraft parking and unloading areas large enough to accommodate maximum anticipated aircraft utilization.

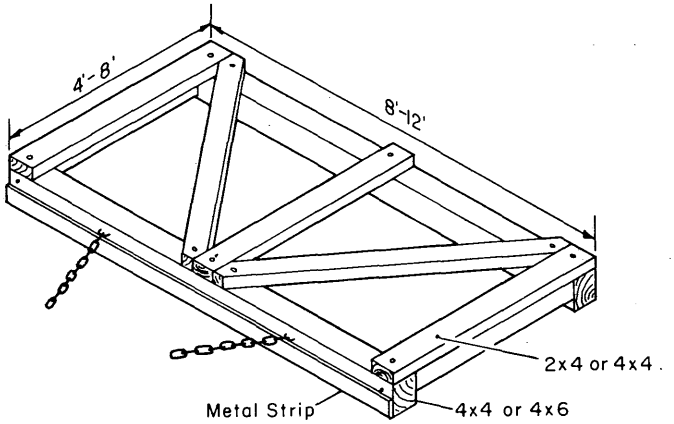

Figure 5. Improvised timber drag.

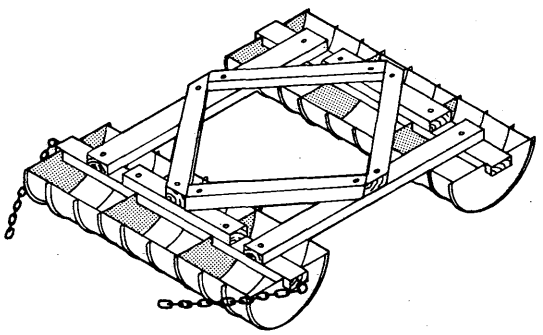

Figure 6. Improvised fuel drum drag.

Initial site preparation

If site selection is done before snowfall, existing vegetation, including tall grass, can be removed, and the necessary terrain surface leveling accomplished with a bulldozer. If compaction equipment is available, incremental compaction after each snowfall is preferable to disaggregation and compaction of a thick snow layer all at once, in terms of the effort and equipment required and the resulting strength of the snow pavement.

However, if site selection cannot be done until after significant snowfall, any small trees or other vegetation within the runway area that are more than 2 ft tall must be cut at ground level and carefully removed. In any case, all unnecessary traffic within the cleared area must be avoided to prevent contamination of the snow until processing begins. The runway and parking areas should be well marked with stakes and flags. Vehicle traffic within the runway area must be prohibited to prevent rutting and disturbing the virgin snow until the compaction processes are started.

Initial leveling

Leveling the snow in the runway area is an exceedingly difficult task if more than minor surface irregularities are present. Minor surface roughness normally can be leveled by towing a wooden drag behind any type of low ground pressure (2 psi or less) tracked vehicle. If snow must be hauled in to

accomplish proper leveling of the surface, undisturbed and clean snow must be used. A surveyor's level is required to determine whether the runway meets required grade and surface roughness criteria as specified by TM 5-330. This cannot be done by eyeballing without an instrument. If the terrain is sufficiently level, the initial leveling may not be required.

If the snow is too soft to support a leveling drag without deep rutting (more than 6 in.), it may be necessary to perform some preliminary compaction with a low ground pressure tracked vehicle such as an M-116, preferably towing a corrugated roller, before any required leveling can begin.

During leveling or other operations, equipment should not start, stop, or change speeds while on the snow pavement. All turning must be done beyond the ends of the runway.

Disaggregation

The effects of compaction alone are usually too limited in depth to provide a sufficiently thick snow pavement. Some method of disaggregation (depth processing) is required if the snow thickness exceeds 1 ft. Several types of equipment have been used for snow disaggregation; rotary snowplows and millers, used for highway and airport clearing, and rotary earth tillers or pulvimixers have been utilized for constructing high strength snow pavements. Versions of farm harrows have been used extensively for snow road construction during winter logging operations. A troop unit normally does not have access to a rotary snowplow or a pulvimixer and, therefore, has to resort to improvised harrows, such as the peg-tooth A-frame type shown in Figure 3, which can be fabricated in the field by any engineer unit.

More effective disaggregation will result from repeated passes with the harrow. Several harrows towed in tandem by a tractor is a preferable arrangement, since neither a time interval nor compaction with the tractor tracks between stages of the disaggregation processes are desirable. Ballasting of the harrows is not normally necessary except in case of an unusually strong surface crust caused by frozen meltwater.

If it has been necessary to perform either initial compaction or leveling of the runway site, some degree of age hardening already has been stimulated due to this disturbance of the snow layer, and, therefore, the disaggregation process should be performed as soon as possible (within hours) before the age hardening process becomes too advanced and limits the harrow action.

Leveling

For maximum effectiveness, compaction should be performed immediately after disaggregation, and any required leveling should be performed prior to or during compaction. If possible, it is desirable to tow a smooth skid behind the last harrow (or during the last harrow pass) which also will produce some immediate compactive action. If the surface after disaggregation is not sufficiently level, backblading with a bulldozer may be used, which will provide not only the desired leveling but also some compaction. For backblading operations, a hydraulically operated blade is preferable to a cable-operated blade. The snow pavement will be stronger and more uniform if leveling and grading are held to a minimum after compaction is completed.

Compaction

The main compaction is accomplished with successive coverages by rollers, with an increased weight applied during each successive coverage. The first few coverages should be performed using the fabricated, corrugated roller shown in Figure 4. Additional weight in the form of ballast (dry crushed stone, gravel, or sand inside the roller) can be used and increased with each successive pass. If such ballast is not available, the weight of the roller can be increased by lashing metal or concrete beams or slabs to the towing bars. A method for ballasting should be considered at the time the roller is fabricated. If external ballast is to be used, the material used for construction of the roller should be considerably stronger than indicated in Figure 4.

It should be noted that ordinarily the tractor tracks produce a more effective, although more concentrated, compactive action than the roller; this should be obvious from the relative sinkage of the tracks and the roller. Therefore, it is important during the consecutive compaction coverages that the tractor does not follow in the same tracks but covers the entire strip as evenly as possible. This will also result automatically in overlapping roller coverage.

As soon as the vehicle towing the roller is no longer rutting the snow surface more than 2 to 3 in., final compaction should be accomplished by successive coverages with D-7 or D-8 tractor tracks. Normally two to five coverages are sufficient. Snow densities of up to 32 lb/ft^3 (0.5 g/cm^3) can be obtained with this method.

Final grading

When the compaction process is completed, a surveyor's level again should be used to determine if the runway meets the grade and surface roughness criteria (TM 5-330). Final grading can be a difficult task if the compacted surface does not meet these criteria. A motorized road grader, which permits the desired accuracy control, cannot be used until the snow pavement has age-hardened sufficiently to prevent the grader wheels from rutting the surface, unless the grader is on skis and towed by a tractor. Consequently, drags towed by tracked vehicles have to be used, followed by a final rolling with the corrugated roller. For a smooth surface finish, a drag of the type shown in Figure 6 can be used after the roller. Subsequent use of a wheeled motorized road grader, which may have to be several days after compaction, is suitable only for removing high spots; low spots filled by the grader at this stage will remain weaker, even after compaction, than the rest of the pavement. Therefore, it is very important that as much leveling as required be done in conjunction with the compaction process, and final grading with a road grader, some time after compaction, be limited to shaving off high spots.

Runway marking

In addition to standard combat lighting and marking sets, a way is needed to provide pilots with good depth perception. This can be done by putting signal panels, raised several inches above the snow surface, at the ends of the runway, or by using a colored dye or powder. The latter is a very temporary means of marking. International orange is best; black should be avoided since it will cause excessive melting of the snow.

Summary of the construction process

One of the most important considerations during the runway construction process is continuity of operations, with a minimum time interval between the individual operations. This is of particular importance between the disaggregation and compaction phases. The ideal procedure would be to tow a compactor immediately behind the disaggregator. However, in practice towing a roller behind the harrow, especially if two or more harrows and a skid are used in tandem, may be neither possible nor practical. The actual procedure to be used depends on whether or not separate tractors or bulldozers are available for each of the disaggregating, compacting, and grading operations. A single tractor operation would mean completing all the processes on each individual harrow-width strip before disaggregation of the next adjacent strip could begin. Availability of two or three tractors would permit a convenient tandem-type operation with a minimal time interval (a matter of minutes) between each process.

The construction process outlined here should, under favorable temperature conditions (–1°C to about –7°C), permit construction of a snow pavement capable of supporting aircraft wheel loads up to the Caribou and C-47 class after 2 to 3 weeks of age hardening. However, operation of such aircraft on the runway may not be safe at temperatures above –12°C.

Operation	Equipment
Disaggregation	Tractor* Harrow Skid
Leveling Compaction	Bulldozer* Roller
Grading	Tractor Drag
Compaction Finishing	Bulldozer Roller Smooth Drag
Final grading	Motorized Road Grader

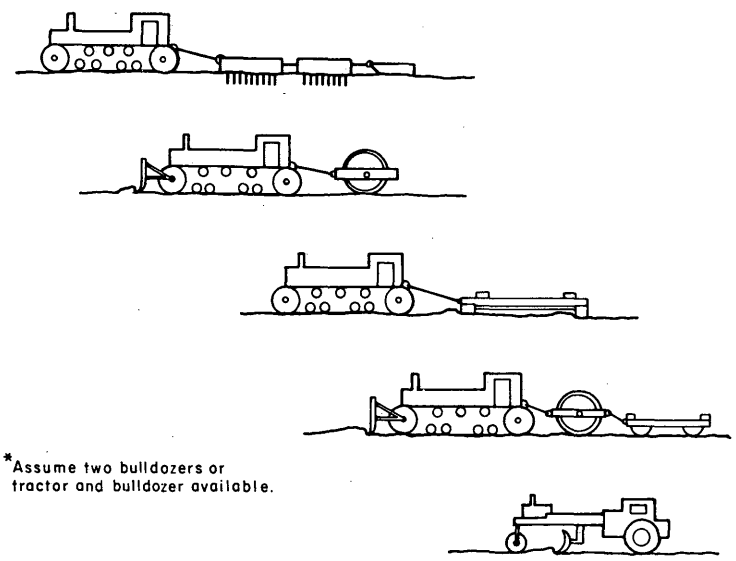

*Assume two bulldozers or tractor and bulldozer available.

Figure 7. Schematic of operation sequence.

Figure 7 shows a schematic summary of the entire snow runway construction process. Appendix A gives a time estimate for a typical construction job.

Limitations

There are several conditions which may prevent or hinder successful completion of a snow runway:

1) Snow cover of less than 2 ft over ground that has more than minor (exceeding 8 in.) surface roughness, or an excessive amount of vegetation which cannot be removed.

2) Ambient temperatures above freezing. The lower limits have not been well established. However, as noted previously, snow will age-harden very slowly at temperatures of –40°F and below. Extrapolation of existing time-temperature age hardening data indicates that at temperatures of –60°F and below the time required would be several weeks or longer.

3) Extremely low temperatures during construction, causing operational problems with the construction equipment. However, it should be noted that an interruption in the construction sequence is less critical during very cold temperatures, since the rate of age hardening is very slow.

4) High winds causing serious drifting problems during construction. In this case operator visibility would also be impaired, posing a safety hazard and resulting in poor quality control during the construction process.

5) The presence of very deep, soft snow may cause significant problems during the pre-compaction and pre-leveling operations. The officer in charge of the operation will have to make independent adjustments and judgments to suit each particular set of circumstances.

Evaluation of snow pavement supporting capacity

A relationship has been established between the hardness (penetration resistance) of a snow pavement, obtained with the Rammsonde cone penetrometer, and its wheel load supporting capacity

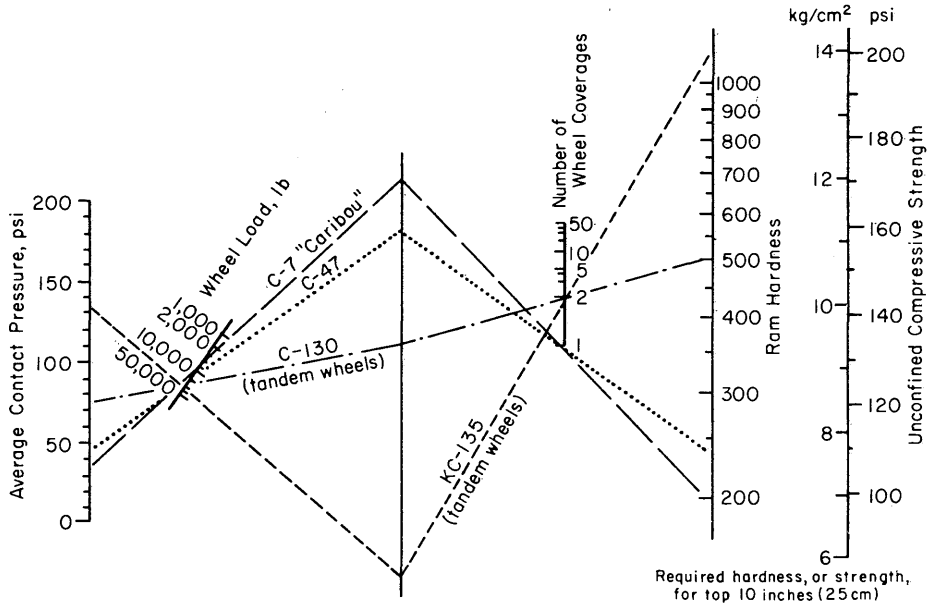

Figure 8. Required hardness (or strength) of a snow pavement for various wheel load conditions.

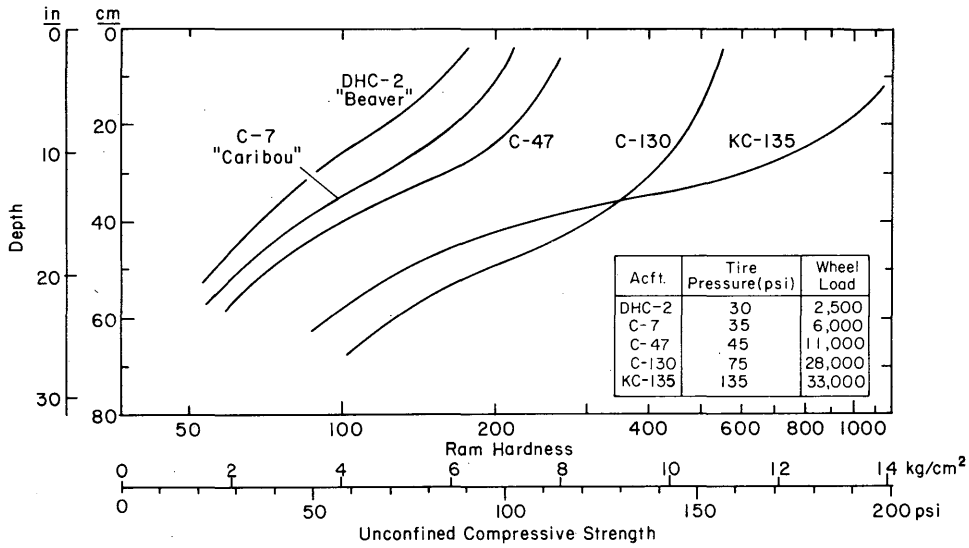

Figure 9. Required hardness (or strength) profiles of a snow pavement for various aircraft.

(Abele et al. 1968). The required Rammsonde hardness, or the corresponding unconfined compressive strength, for various wheel loads, contact pressures, and number of traffic repetitions is shown as a nomogram in Figure 8. The required snow pavement hardness, or strength, profiles for typical aircraft are shown in Figure 9. A description of the Rammsonde cone penetrometer (ram) and instructions for its use are given in Appendix B. Since snow strength varies with temperature, but density does not, density alone is not a reliable index of snow strength.

The Rammsonde is a useful and convenient instrument for monitoring the age hardening process and for determining the strength characteristics of the snow pavement at any time. However, even a great number of ram hardness observations may not provide a reliable indication of the traffic load supporting capacity of the runway as a whole; good quality control during construction is difficult, and undetected soft spots may be present. To determine the integrity of the runway pavement, it is necessary to subject the entire runway to wheeled traffic with wheel load and tire pressure conditions simulating (or preferably exceeding by 20%) those of the aircraft expected to use the runway. The use of a loaded truck with single tires instead of duals, inflated or deflated to the desired pressure, is one expedient method of simulating aircraft loads. Ordinarily, the inflation pressure of a tire is similar to the average ground contact pressure.

Since snow strength, or hardness, varies with temperature, the load supporting capacity of the snow pavement will vary likewise, increasing with a decrease in temperature and vice versa. It is necessary to perform the traffic tests periodically during the operating season, especially if increases in temperature have occurred. Care should be taken not to damage the pavement during the traffic tests; this can be avoided by increasing the wheel loads progressively and watching for any signs of failure or rutting.

Operation and maintenance

Tracked vehicles, except those with smooth rubber tracks, should be kept off the runway. If this is impossible, very slow speeds should be used and sharp turns and sudden stops avoided. Particular care should be taken during warm periods. During aircraft operations, hard braking and sharp turns should also be avoided as much as safely possible.

Under no conditions should refueling take place on the runway, since any fuel spilled will immediately destroy the strength of the snow pavement. Refueling should take place at designated parking areas, with the realization that these areas will be a constant source of maintenance problems.

All debris should be kept off the runway. Dark objects can be especially harmful by producing melt holes.

Ruts and holes can be repaired by carefully filling them with fresh disaggregated snow and compacting the new snow. Some warming of the snow (without excessive melting) during placement in the ruts or holes, and while compacting, can give improved results. The repaired areas should not be disturbed until the required strength is reached through age hardening.

Any new snowfall should be compacted as soon as possible with rollers. The thinner the snow layer to be compacted, the better the results; that is, if possible, new snow should not be allowed to accumulate to a thickness of more than a few inches before compaction is begun. Consequently, during heavy or prolonged snowfall, compaction may have to be done while it is snowing.

In some cases, instead of compaction, removal of any new snow may be preferable, especially if the new snow layer is several inches thick. For example, if the runway has to be used shortly after a new snowfall, the compacted new snow may not have sufficient time to age-harden. Whether compaction or removal is preferable will be dictated by the type of aircraft, thickness of the new snow layer, temperature, available time and equipment, etc. Ordinarily, removal of new snow is more difficult than compaction. Removal also involves the danger of damaging the snow pavement below. When removing snow by plowing care must be taken to avoid leaving snow berms at the sides of the runway which would result in subsequent drifting of snow.

Selected bibliography

Abele, G., R.O. Ramseier and A.F. Wuori (1968) Design criteria for snow runways. U.S. Army Cold Regions Research and Engineering Laboratory (USA CRREL) Technical Report 212.

Camm, J.B. (1960) Snow compaction equipment – Snow drags. U.S. Navy Civil Engineering Laboratory (US NCEL) Technical Report 109.

Department of the Army (1969) Engineer field data. Field Manual FM 5-34.

Departments of the Army and Air Force (1968) Planning and design of roads, airbases, and heliports in the theater of operations. TM 5-330.

Kragelski, I.V. (1945) Consolidation of snow surfaces by depth processing. From *The physico-mechanical properties of snow and their application in the construction of airfields and roads*, Akademiia Nauk SSSR, Moscow. (Translated by Bureau of Yards and Docks, 1949.)

Moser, E.H. (1962) Snow compaction techniques. US NCEL Technical Report 114.

Moser, E.H. (1964) Snow compaction – Design criteria and test procedures. US NCEL Technical Report 113.

Wuori, A.F. (1963) Snow stabilization for roads and runways. USA CRREL Technical Report 83.

APPENDIX A. CONSTRUCTION TIME ESTIMATE

For initial calculations, assume:

Runway length	3000 ft
Runway width	100 ft
Effective processing width per pass (disaggregating, leveling, compacting) to permit sufficient overlap	5 ft
Construction equipment speed	250 ft/min
Two bulldozers available: one for disaggregating, one for leveling-compacting.	

	Cumulative time
Disaggregating: 3000 ft at 250 ft/min = 12 min/pass; use 15 min/pass including turnaround time; 100-ft width at 5 ft/pass = 20 passes.	5 hr
Leveling, compacting: begin after the first few disaggregation passes, complete 2 hr after completion of disaggregation.	7 hr
Final grading: complete 2 hr after completion of leveling and compaction.	9 hr
Miscellaneous: preparations, engine start up, etc. = 1 hr.	10 hr

Experience has shown that a "safety factor" of 2 should be used for scheduling field construction operations of this type:

Therefore: for a 3000- × 100-ft area assume required construction time = 20 hr

or: plan construction in 50-ft width increments per 10-hr work day.

Therefore: total time for 50-ft width (3000 ft long) = 1 day

or: for a 100-ft width = 2 days

plus: initial site preparation. = 2 days

Continuous operation or a 10-hr work day may not be feasible because of darkness; a 5-hr work day (actual construction) may be a more realistic assumption; therefore, consider construction in 25-ft width/day increments.

Total construction time for 3000- × 100-ft runway at 25-ft width/day	=	4 days
plus initial site preparation.	=	2 days
Total	=	6 days
For a 5000- × 150-ft runway Total	=	15 days

APPENDIX B. RAMMSONDE CONE PENETROMETER

The Rammsonde ("Ram") was adapted by the U.S. Army and others from an instrument originally used in the Swiss Alps. It is used for determining a measure of hardness of snow vs depth based on penetration of a cone under impact of known energy. It has found extensive application for estimating avalanche danger and for determining allowable wheel loads on artificially compacted snow pavements.

The Rammsonde hardness instrument is a cone penetrometer consisting of a hollow, 2-cm-diam aluminum shaft with a 60° conical tip, a guide rod, and a drop hammer. The standard cone has a diameter of 4 cm and a height of 3.5 cm; the total length of the penetrometer cone element (to the beginning of the shaft) is 10 cm (Fig. B1). The guide rod, inserted into the top of the shaft, guides the drop hammer.

The hammer is raised by hand to a certain height which is read in centimeters on the guide rod, and then dropped freely (Fig. B2). The depth of penetration is read from the centimeter scale on the shaft. The resistance to penetration (hardness) of snow can be determined by observing either the amount of penetration after each hammer drop or the number of hammer drops (blows) necessary to obtain a certain penetration. In relatively hard, homogeneous snow it is usually more convenient to determine the number of blows needed to penetrate through some predetermined depth increment (recording the number of hammer blows after each 5-cm depth increment is a convenient procedure commonly used). In layered and new, soft snows the more satisfactory procedure is to observe the amount of penetration after each hammer blow.

The standard Rammsonde kit contains two drop hammers, 1 kg and 3 kg in weight. A combination of one of the hammer weights and some drop height (range 0 to 50 cm) usually allows a suitable rate of penetration (between 1 cm per 5 hammer blows and 5 cm per blow) in a great variety of snows. Of course, the fewer hammer weight and drop height combinations are used during a series of tests, the more convenient is the subsequent data reduction.

The ram hardness is computed from the following expression:

$$R = \frac{Whn}{x} + W + Q$$

where:

R = ram hardness number (kg)

W = weight of drop hammer (kg)

h = height of drop (cm)

n = number of hammer blows

x = penetration after n blows (cm)

Q = weight of penetrometer (kg).

The ram hardness number R is an arbitrary index which indicates the resistance in kilograms offered by snow to the vertical penetration caused by ramming a metal cone of given dimensions.

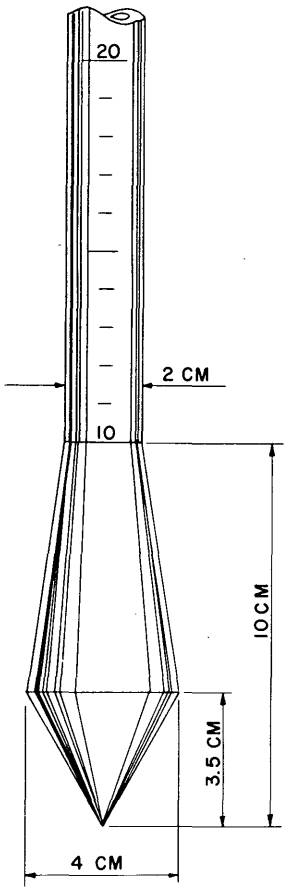

Figure B1. Rammsonde penetrometer cone.

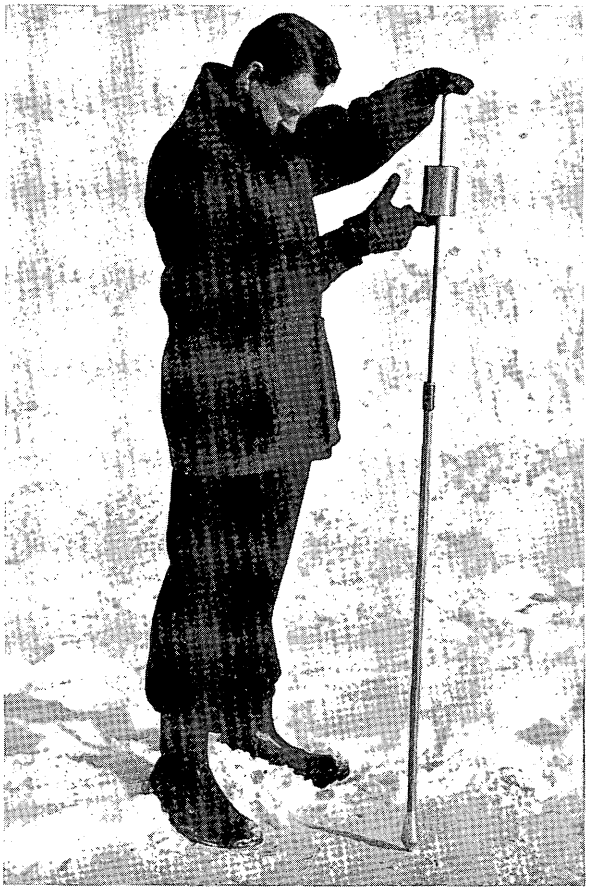

Figure B2. Rammsonde penetrometer in use.

The hardness reading at any depth, obtained when the tip of the cone is at that depth, represents the mean hardness through the depth increment between this and the previous reading.

The hardness values have been correlated with unconfined compressive strength, as shown previously in Figures 8 and 9.

Because of the conical shape of the penetrometer head and the vicinity of a free surface, the hardness number (obtained by the above equation) for the 0- to 5-cm depth has to be multiplied by 4.7, that for the 5- to 10-cm depth by 1.6, or that for the 0- to 10-cm depth by 3, to obtain the true ram hardness of the 10-cm surface layer.

The standard Rammsonde kit contains extensions for the penetrometer shaft in case hardness profiles are required for more than 1 m depth.

Figure B3 shows a ram hardness data card which may be used in the field. Sample data and calculations are shown on the card. Note the correction factors of 4.7 and 1.6 for the 5- and 10-cm readings, respectively. Referring back to Figures 8 and 9, it can be observed that the snow pavement at this location may be suitable, just barely, for C-47 operations, and safe for the Caribou and the Beaver provided the rest of the runway is of equivalent hardness.

RAMMSONDE HARDNESS

No. 15

Location ℄ Runway Test Position 5

Surface Descr. 0.5 cm new snow

Age Hard. 18 days Snow T -5°C Air T -4°C

Date 3 March 73 Time 1015 Observer

Remarks Overcast, calm

$$\text{Hardness No.} = R = \frac{Whn}{x} + (W + qQ)$$

W = Wt. of hammer (kg)
q = No. of tube lengths
Q = Wt. of one tube (kg)
x = Penetration resulting from n blows
h = Height of fall (cm)
n = No. of blows
d = Depth of cone

W	h	n	d	x	$\frac{Whn}{x}$	W + qQ	R	
3	20	4	5	5	48	4	52 × 4.7	= 244
"	"	13	10	"	156	"	160 × 1.6	= 256
"	"	19	15	"	228	"	232	
"	50	7	20	"	210	"	214	
"	"	8	25	"	240	"	244	
"	"	6	30	"	180	"	184	
"	"	6	35	"	180	"	184	
"	"	5	40	"	150	"	154	
"	"	4	45	"	120	"	124	
"	"	4	50	"	120	"	124	

CRREL FORM 20 MAY 63 56

Figure B3. Rammsonde data card (with sample data).

Unclassified

Security Classification

DOCUMENT CONTROL DATA - R & D

(Security classification of title, body of abstract and indexing annotation must be entered when the overall report is classified)

1. ORIGINATING ACTIVITY *(Corporate author)*
U.S. Army Cold Regions Research and Engineering Laboratory
Hanover, New Hampshire 03755

2a. REPORT SECURITY CLASSIFICATION
Unclassified

2b. GROUP

3. REPORT TITLE
EXPEDIENT SNOW AIRSTRIP CONSTRUCTION TECHNIQUE

4. DESCRIPTIVE NOTES *(Type of report and inclusive dates)*

5. AUTHOR(S) *(First name, middle initial, last name)*
E.F. Clark, G. Abele and A.F. Wuori

6. REPORT DATE
December 1973

7a. TOTAL NO. OF PAGES
19

7b. NO. OF REFS
6

8a. CONTRACT OR GRANT NO.

b. PROJECT NO.

c. DA Project 4A062103A894
Task 02, Work Unit 001

d.

9a. ORIGINATOR'S REPORT NUMBER(S)
Special Report 198

9b. OTHER REPORT NO(S) *(Any other numbers that may be assigned this report)*

10. DISTRIBUTION STATEMENT
Approved for public release; distribution unlimited.

11. SUPPLEMENTARY NOTES

12. SPONSORING MILITARY ACTIVITY
Directorate of Military Engineering
Office, Chief of Engineers
Washington, D.C.

13. ABSTRACT

Specialized snow runway processing and construction equipment ordinarily is not available to Army engineer troop units. Therefore, utilization of existing equipment and devices improvised in the field is necessary. Disaggregation of the natural snow cover, followed immediately by compaction and grading, is the fundamental procedure required for preparing a snow pavement capable of supporting, after age hardening, wheeled aircraft of the Caribou and C-47 class. A peg-toothed A-frame harrow, a corrugated roller and drags, constructed in the field, can be used with available D-7 or D-8 bulldozers for the disaggregation, compaction, and grading processes.

14. Key Words

Cold weather construction
Runways
Snow construction

DD FORM 1 NOV 65 1473 REPLACES DD FORM 1473, 1 JAN 64, WHICH IS OBSOLETE FOR ARMY USE.

Unclassified

Security Classification